T.O. 31R2-2VRC4-2
(Formerly AN 16-30VRC4-2)

HANDBOOK
SERVICE INSTRUCTIONS

TRANSMITTER T-91/VRC-4
RECEIVER R-114/VRC-4

(FISHER RESEARCH LABORATORY)

PUBLISHED UNDER AUTHORITY OF THE SECRETARY OF THE AIR FORCE
AND THE CHIEF OF THE BUREAU OF AERONAUTICS

AF Olmsted AFB, Pa., 18 Jan 56 600 REPRINT

30 NOVEMBER 1952

Reproduction for non-military use of the information or illustrations contained in this publication is not permitted without specific approval of the issuing service (BuAer or AMC). The policy for use of Classified Publications is established for the Air Force in AFR 205-1 and for the Navy in Navy Regulations, Article 1509.

LIST OF REVISED PAGES ISSUED

INSERT LATEST REVISED PAGES. DESTROY SUPERSEDED PAGES.

NOTE: The portion of the text affected by the current revision is indicated by a vertical line in the outer margins of the page.

* The asterisk indicates pages revised, added or deleted by the current revision.

ADDITIONAL COPIES OF THIS PUBLICATION MAY BE OBTAINED AS FOLLOWS:

USAF

USAF ACTIVITIES.—In accordance with Technical Order No. 00-5-2.
NAVY ACTIVITIES.—Submit request to nearest supply point listed below, using form NavAer-140: NAS, Alameda, Calif.; ASD, Orote, Guam; NAS, Jacksonville, Fla.; NAS, Norfolk, Va.; NASD, Oahu; NASD, Philadelphia, Pa.; NAS, San Diego, Calif.; NAS, Seattle, Wash.
For listing of available material and details of distribution see Naval Aeronautics Publications Index NavAer 00-500.

TABLE OF CONTENTS

Section		Page
I	DESCRIPTION AND LEADING PARTICULARS	1
	1-1. Description	1
	1-2. Identification	1
	1-3. Purpose and Basic Principles	1
	1-5. Leading Particulars	2
	1-6. General	2
	1-7. Table 1-4 Transmitter Particulars	2
	1-8. Table 1-5 Receiver Particulars	2
	1-9. Location and Function of Tubes and Crystals	3
	1-10. Transmitter Tubes and Crystals	3
	1-11. Receiver Tubes and Crystals	3
	1-12. Location and Function of Controls	3
	1-13. Transmitter Front Panel Controls	3
	1-14. Transmitter Chassis Controls	3
	1-15. Receiver Front Panel Controls	4
	1-16. Receiver Chassis Controls	6
II	TEST EQUIPMENT AND SPECIAL TOOLS	10
	2-1. General	10
III	PREPARATION FOR USE AND RESHIPMENT	10
	3-1. Uncrating Procedure	10
	3-3. Installation	10
	3-4. Location and Arrangement of Components	10
	3-6. Antenna Considerations	10
	3-8. Interconnection of Components	10
	3-10. Preparation for Use	10
	3-11. Preliminary Checks	12
	3-12. Packing the Equipment for Shipment or Storage	12
IV	THEORY OF OPERATION	13
	4-1. System Operation	13
	4-3. Functional Operation of Electronic Components	13

Section		Page
IV (cont)	4-4. Functional Operation of Transmitter T-91/VRC-4	13
	4-38. Functional Operation of Receiver R-114/VRC-4	17
	4-39. Summary	17
V	OPERATIONAL AND ORGANIZATIONAL MAINTENANCE	24
	5-1. Minimum Performance Standards	24
	5-2. General	24
	5-3. Transmitter Check Chart	24
	5-4. Receiver Check Chart	24
	5-5. Systems Analysis	25
	5-6. General	25
	5-9. Equipment Failure	25
	5-10. Receiver Failure	25
	5-11. Transmitter Failure	25
	5-16. Minor Repair and Adjustment	26
	5-24. Receiver Adjustments	29
	5-28. Lubrication	29
	5-30. Inspection and Cleaning Schedule	29
VI	FIELD AND FASRON MAINTENANCE	29
	6-1. Minimum Performance Standards	29
	6-2. General	29
	6-3. Transmitter Check Chart	29
	6-4. Receiver Check Chart	30
	6-5. Systems Analysis	31
	6-6. General	31
	6-9. Equipment Failure	31
	6-10. Transmitter Trouble Shooting Chart	31
	6-11. Receiver Trouble Shooting Chart	36
	6-12. Transmitter Voltage and Resistance Chart	38
	6-13. Receiver Voltage and Resistance Chart	40
	6-14. Alignment and Adjustments	43
	6-15. Transmitter Tuning and Adjustments	43
	6-16. General	43
	6-21. Tuning, Crystal Control	43

Section		Page
VI (cont)	6-22. Tuning Chart for Crystal Operation	44
	6-23. Antenna Loading Circuit	45
	6-24. Tuning Variable Frequency Control	45
	6-25. Tuning Chart for Variable Frequency Operation	45
	6-26. Tuning Crystal Control	47
	6-27. Receiver Tuning and Adjustments	47
	6-28. General	47
	6-30. Tuning Crystal Control	47
	6-31. Tuning Variable Frequency Control	47
	6-33. Alignment of I-F Amplifier Stages	50
	6-35. BFO Circuit Adjustment	50
	6-36. Automatic Squelch or Q Circuit Adjustment	50
	6-38. Signal-to-Noise Ratio Measurement	50
	6-39. Lubrication	50
	6-40. Inspection and Cleaning Schedule	50
VII	DIAGRAMS	50
	7-1. Transmitter Schematic	51
	7-2. Receiver Schematic	52
	7-3. 6 Volt D-C Power Distribution Diagram	53
	7-4. 110 Volt A-C Power Distribution Diagram	54
	INDEX	55

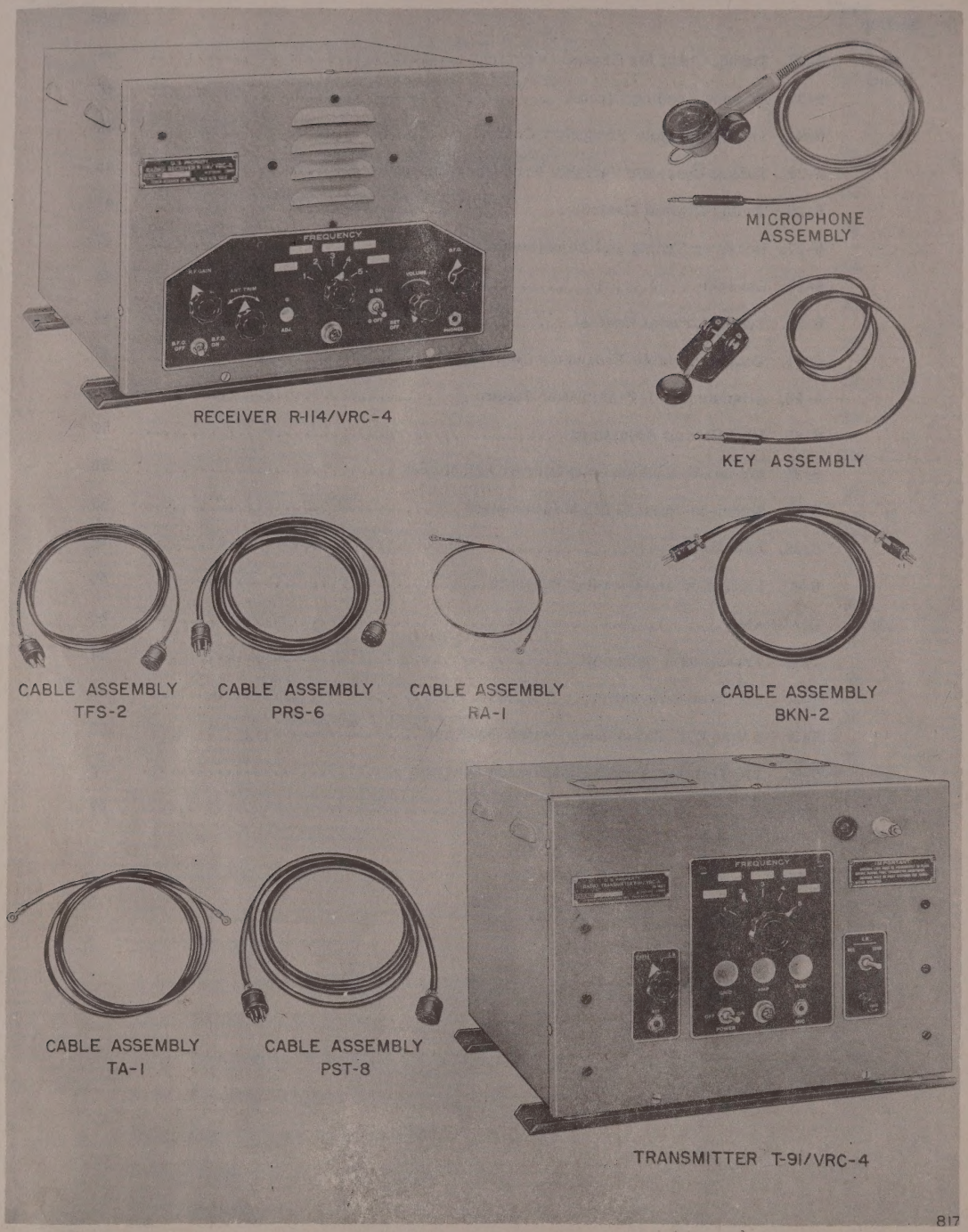

Figure 1-1. Transmitter T-91/VRC-4, Receiver R-114/VRC-4, and Associated Cable Assemblies

SECTION I

DESCRIPTION AND LEADING PARTICULARS

1-1. DESCRIPTION.

1-2. IDENTIFICATION. This publication provides complete service instructions for the radio communication equipment set manufactured by Fisher Research Laboratory Inc. of Palo Alto, California, which is shown in figure 1-1. Table 1-1 lists the identifiable nomenclature for the major components and those separate items which have been assigned identifying designations. An overall designation for the complete equipment has not been assigned. Additional publications include a Handbook of Operating Instructions, a Handbook of Overhaul Instructions and a Parts Catalog for the same radio equipment. Maintenance or overhaul procedures beyond the scope of this publication should not be attempted from the information contained herein. Reference to the additional publications noted above should be made where necessary.

1-3. PURPOSE AND BASIC PRINCIPLES. This radio communication equipment when used together with additional items (power supplys headphones and antennas) constitutes the physical equipment of a 25-watt radio station. The equipment is readily transportable and adapted for either fixed station or mobile installations. Either voice or code (cw communication) operation is possible. Effective communication range of this equipment depends to some degree upon the normally controlling conditions of atmosphere, frequency, antenna, and terrain. However reliable 2 way communication may be expected under normal and mildly adverse conditions using voice to a distance of at least 20 miles. Using code on cw transmission at least 50 miles effective range can be expected and under favorable conditions these ranges may easily be doubled for non-mobile station operation.

TABLE 1-1. EQUIPMENT SUPPLIED

Name	Type Designation	Quantity Required for Typical Installation
Receiver	R-114/VRC-4	1
Microphone and Cable Assembly	T-17-D	1
Key and Cable Assembly		1
Cable - Power	TFS-2	1
Cable - Special	PRS-6	1
Cable - Special	RA-1	1
Cable - Special	BKN-2	1
Cable - Special	TA-1	1
Cable - Special	PST-8	1
Transmitter	T-91/VRC-4	1

1-4. The following equipment, required for station operation of the radio set, is not supplied by Fisher Laboratory.

TABLE 1-2. EQUIPMENT REQUIRED BUT NOT SUPPLIED

Name	Type Designation	Quantity Required for Typical Installation
Power Unit, 6 volt, dc (for transmitter and receiver)	PU-49/VRC-4	1 (See alternative below)
Power Unit, 110 volt, ac, 50/60 cycle (for transmitter) Power Unit, 110 volt, ac, 50/60 cycle (for receiver)		Alternative for PU-49/VRC-4 above

TABLE 1-2. EQUIPMENT REQUIRED BUT NOT SUPPLIED (cont)

Name	Type Designation	Quantity Required for Typical Installation
Antenna Assembly (whip antenna)	AS-170/VRC-4	1 (See alternative below)
Single-Wire Antenna (used as alternate for whip antenna)	Brown and Sharpe gauge No. 12 or 14, solid or stranded copper wire	35 feet (if used)
Cable (for 6 volt, dc, power unit)	PC-1 (No. 1/0, insulated)	10 feet
Solderless Connecting Lugs (for Cable PC-1)		4
Test meter lead connecting plug	PJ-055B or equivalent	1
Headphones	(Suitable)	1

1-5. LEADING PARTICULARS.

1-6. GENERAL. The following data of a general nature pertains to the complete equipment. For specific data regarding the separate components refer to pertinent paragraphs which follow.

TABLE 1-3. GENERAL PARTICULARS

Overall Weight (uncrated)	75 lbs
Overall Weight (crated)	165 lbs
Cubic Contents (crated)	10.2 cu ft.
Finish (Major Components)	Gray enamel crackle

1-7. TABLE 1-4. TRANSMITTER PARTICULARS

Frequency Range:	
Four crystal controlled channels (1, 2, 3, and 4)	1.7 mc to 8.7 mc
One tunable channel (5)	4.0 mc to 7.0 mc
Transmitter Type	Master oscillator--power-amplifier
Types of Signals Transmitted	cw and voice
Type of Modulation	AM
Number of Tubes	4: 1 JAN 6V6GT (oscillator) 1 JAN 807 (power-amplifier) 2 JAN 6L6 (modulator)
Number of Fuses	1: 250 volt, 3/8 amp
Power Input	6 volt, dc, 10 amps standby, 42 amps Transmit (using Power Unit PU-49/VRC-4)
Alternative Power Input	110 volt, ac, 50/60 cycle, 148 watts standby, 340 watts Transmit
Power Output:	
cw Operation	25 watts
Voice Operation	25 watts

1-8. TABLE 1-5. RECEIVER PARTICULARS

Frequency Range:	
Four crystal controlled channels (1, 2, 3, and 4)	1.7 mc to 8.7 mc
One tunable channel (5)	190 kc to 510 kc
Intermediate Frequency	525 kc
Receiver Type	Superheterodyne

TABLE 1-5. RECEIVER PARTICULARS (cont)	
Types of Signals Received	cw, tone, and voice (phone)
Number of Tubes	8: 1 JAN 6SK7 (rf amplifier) 1 JAN 6K8 (oscillator-mixer) 2 JAN 6SK7 (if amplifier) 1 JAN 6SQ7 (2nd detector-squelch) 1 JAN 6SQ7 (1st audio amplifier) 1 JAN 6K6GT (2nd audio amplifier) 1 JAN 6SK7 (beat frequency oscillator)
Calibration Method for Channel 5	Frequency Meter Set SCR-211 or its equivalent

1-9. LOCATION AND FUNCTION OF TUBES AND CRYSTALS.

1-10. TRANSMITTER TUBES AND CRYSTALS. (See figure 1-2.)

a. Tube V1. Power-amplifier tube, type JAN 807.
b. Tube V2. Modulator tube, type JAN 6L6.
c. Tube V3. Modulator tube, type JAN 6L6.
d. Tube V4. Oscillator tube, type JAN 6V6GT.
e. Crystal Y1. Oscillator crystal for channel 1.
f. Crystal Y2. Oscillator crystal for channel 2.
g. Crystal Y3. Oscillator crystal for channel 3.
h. Crystal Y4. Oscillator crystal for channel 4.

1-11. RECEIVER TUBES AND CRYSTALS. (See figure 1-3.)

a. Tube V101. rf amplifier tube, type JAN 6SK7.
b. Tube V102. Oscillator-mixer tube, type JAN 6K8.
c. Tube V103. 1st if amplifier tube, type JAN 6SK7.
d. Tube V104. 2nd if amplifier tube, type JAN 6SK7.
e. Tube V105. 2nd detector-squelch tube, type JAN 6SQ7.
f. Tube V106. 1st audio amplifier tube, type JAN 6SQ7.
g. Tube V107. 2nd audio amplifier tube, type JAN 6K6GT.
h. Tube V108. Bfo tube, type JAN 6SK7.
i. Crystal Y101. High frequency oscillator crystal for channel 1.
j. Crystal Y102. High frequency oscillator crystal for channel 2.
k. Crystal Y103. High frequency oscillator crystal for channel 3.
l. Crystal Y104. High frequency oscillator crystal for channel 4.

1-12. LOCATION AND FUNCTION OF CONTROLS.

1-13. TRANSMITTER FRONT-PANEL CONTROLS. (See figure 1-4.)

a. MIC Jack J4. Microphone 1700-UB with connector plug PJ-068 or its equivalent connects to this jack for voice operation.
b. POWER Switch S4. One side of this switch supplies filament voltage to all tubes. The other side of the switch is used only with the 110 volt, a-c, power unit and closes the circuit to the primary of the power unit transformer.
c. Pilot Light E3. Lights when voltage is applied to the filament circuit.
d. PHONE-C.W. Switch S2. Provides the change-over of various circuit elements from phone to cw transmission.
e. REC.-SEND Switch S5. This switch, in conjunction with Switch S2, controls the tubes' plate voltage and silences the receiver for cw transmission.
f. FREQUENCY Selector Switch S1. Selects, for each pre-assigned operating frequency, the crystal, the oscillator tank coil tap, the oscillator tank tuning capacitor, the power-amplifier padder capacitor(s), the power-amplifier tank tuning capacitor, the power-amplifier tank coil tab, the power-amplifier tank coil antenna loading tab, and the antenna series loading coil tab.
g. KEY Jack J5. The telegraph key with plug PJ-055B or its equivalent connects to this jack for cw transmission.
h. R-F Indicator E2. Lights when power is applied to the antenna.
i. Fuse F1. Protects the plate circuits of all tubes.
j. GRID Jack J1. Provides a means of measuring the grid current of the power-amplifier tube.
k. AMP Jack J2. Provides a means of measuring the cathode current of the power-amplifier tube.
l. MOD Jack J3. Provides a means of measuring the cathode current of the two modulator tubes.
m. Antenna Terminal. Antenna Assembly AS-170/VRC-4 or its single-wire alternate connects to this terminal.

1-14. TRANSMITTER CHASSIS CONTROLS. (See figure 1-5.)

a. Capacitor C27. Frequency control of the variable oscillator control unit used for channel 5.
b. HI-LO Switch S6. Selects the appropriate oscillator tank coil tap for channel 5.
c. Capacitor C21. Tunes the oscillator tank circuit for channel 1.
d. Capacitor C22. Tunes the oscillator tank circuit for channel 2.
e. Capacitor C23. Tunes the oscillator tank circuit for channel 3.
f. Capacitor C24. Tunes the oscillator tank circuit for channel 4.
g. Capacitor C25. Tunes the oscillator tank circuit for channel 5.
h. Capacitor C1. Tunes the power-amplifier tank circuit for channel 1.
i. Capacitor C2. Tunes the power-amplifier tank circuit for channel 2.
j. Capacitor C3. Tunes the power-amplifier tank circuit for channel 3.
k. Capacitor C4. Tunes the power-amplifier tank circuit for channel 4.

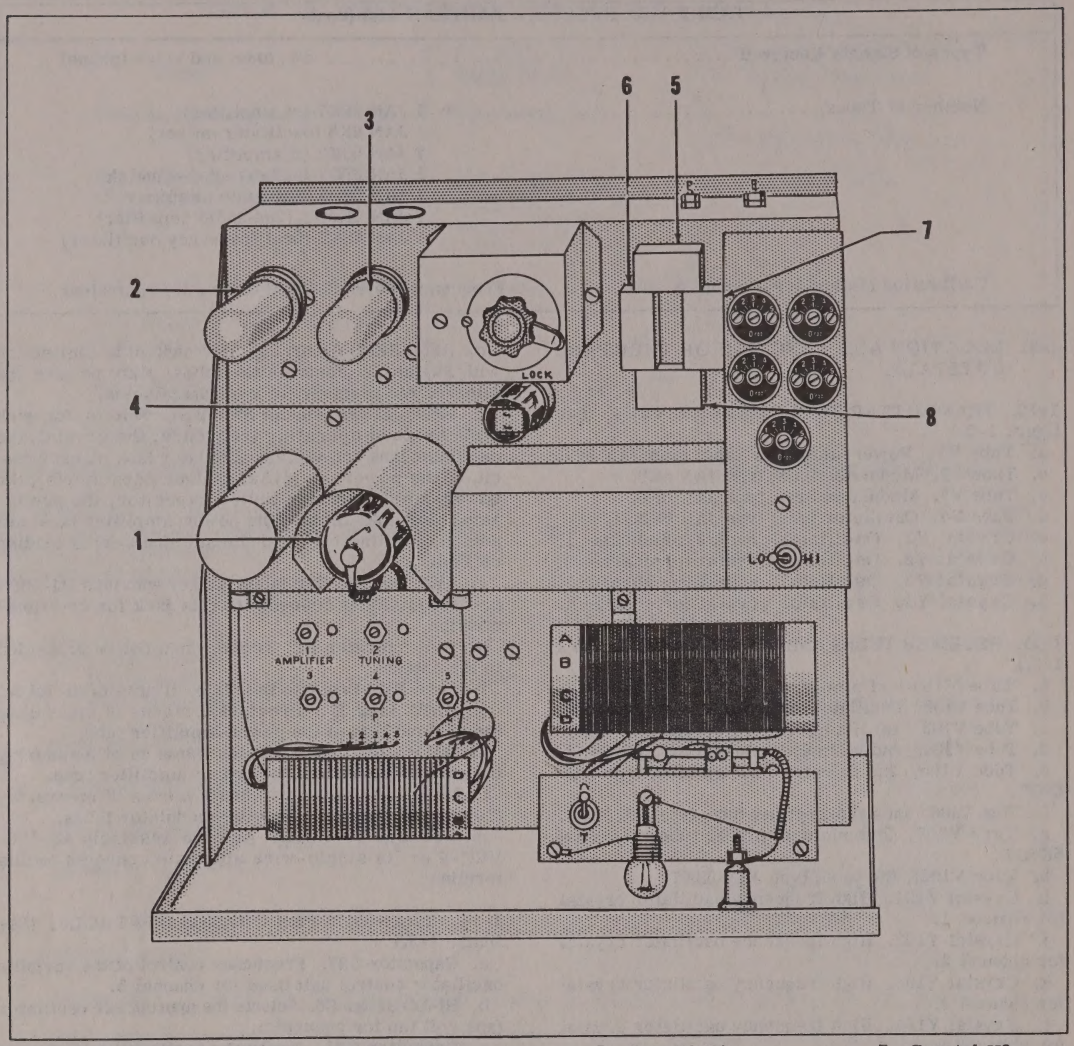

1. Tube V1
2. Tube V2
3. Tube V3
4. Tube V4
5. Crystal Y1
6. Crystal Y2
7. Crystal Y3
8. Crystal Y4

Figure 1-2. Transmitter Tube and Crystal Locations

l. Capacitor C5. Tunes the power-amplifier tank circuit for channel 5.

m. Power-Amplifier Tank Coil L1. One set of tabs on this coil determines the frequency range of the power-amplifier tank circuit; the other set of tabs determines the amount of antenna loading. The tabs are selected during the tuning procedure.

n. Antenna Series Loading Coil L2. The tabs of this coil tune the antenna circuit; they are selected during the tuning procedure.

o. T-O Switch S3. Provides a means of applying protective bias to the tubes during tune up. The switch is normally in the "O" (operate) position.

1-15. RECEIVER FRONT-PANEL CONTROLS. (See figure 1-6.)

a. VOLUME Control, Variable Resistor R137 and Switch S102. The switch is the main power control and the variable resistor determines the amount of signal applied to the 1st audio amplifier tube.

b. Pilot Light E101. Lights when voltage is applied to the tube filaments.

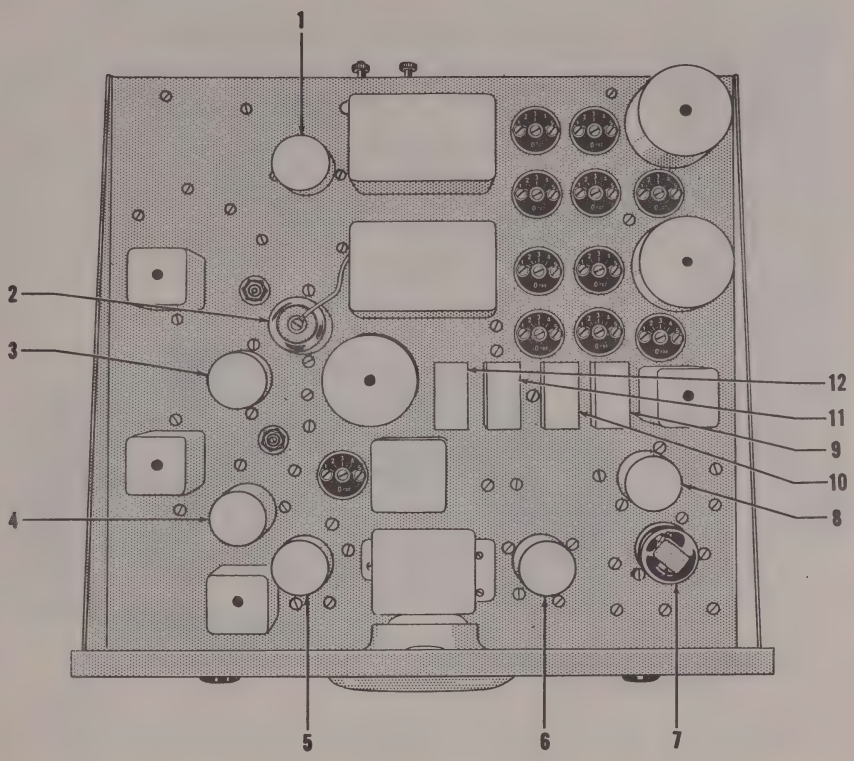

1. Tube V101
2. Tube V102
3. Tube V103
4. Tube V104
5. Tube V105
6. Tube V106
7. Tube V107
8. Tube V108
9. Crystal Y101
10. Crystal Y102
11. Crystal Y103
12. Crystal Y104

Figure 1-3. Receiver Tube and Crystal Locations

c. R.F. GAIN Control, Variable Resistor R138. Determines the gain of the rf amplifier tube.

d. B.F.O. ON-OFF Switch S103. Controls the plate voltage of the bfo tube and the avc voltage. The B.F.O. switch cuts off the avc voltage when receiving cw signals in order to provide stable reception.

e. FREQUENCY Selector Switch S101. Selects, for each pre-tuned frequency, the high frequency oscillator crystal, the r-f input transformer and its tuning capacitor, and the oscillator-mixer input transformer and its tuning capacitor.

f. Q ON-OFF Switch S104. Controls the plate voltage of the automatic squelch circuit tube.

g. ANT. TRIM Control, Capacitor C140. Peaks the tuning of the r-f input transformer to compensate for minor changes in the antenna characteristics.

h. PHONES Jack J102. Headphones with plug PJ-055B or its equivalent connects to this jack. When the headphones are plugged in, the speaker is disconnected.

i. B.F.O. Control, Capacitor C152. Controls the frequency of the beat frequency oscillator.

j. Q ADJ. Control, Variable Resistor R136. Deter-

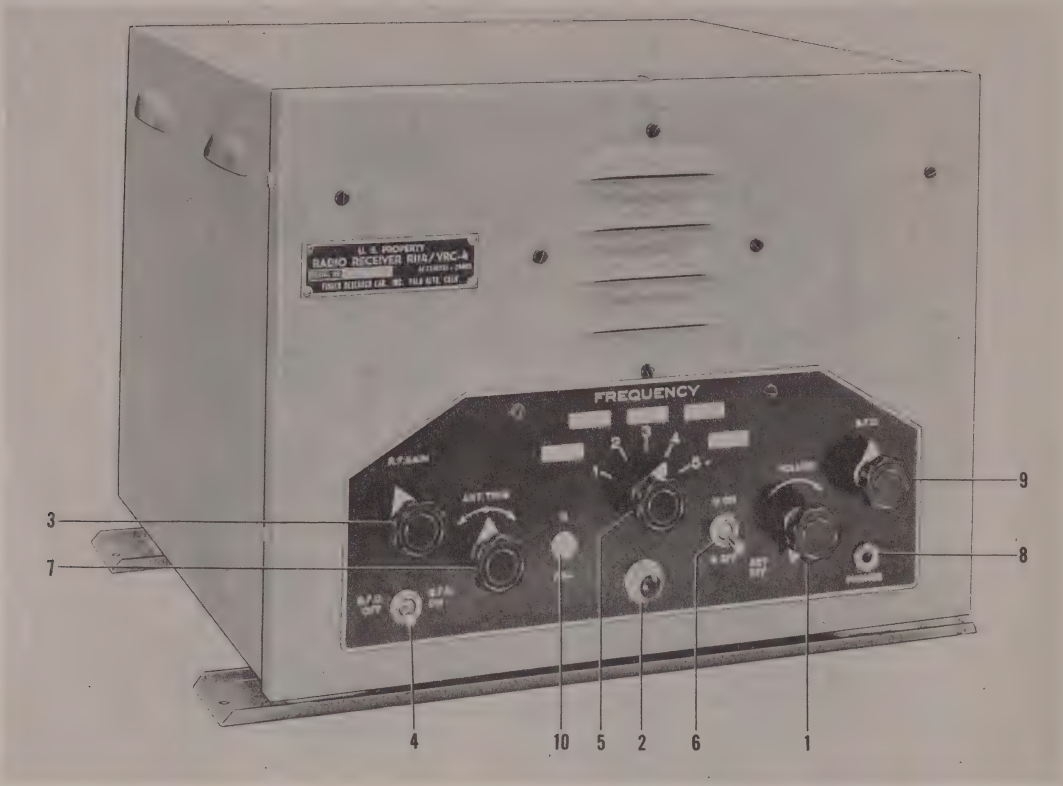

1. MIC Jack J4
2. POWER Switch S4
3. Pilot Light E3
4. PHONE-C.W. Switch S2
5. REC.-SEND Switch S5
6. FREQUENCY Selector Switch S1
7. KEY Jack J5
8. R-F Indicator E2
9. Fuse F1
10. GRID Jack J1
11. AMP Jack J2
12. MOD Jack J3
13. Antenna Terminal

Figure 1-4. Transmitter Front-Panel Controls

mines the amount of signal applied to the Q or automatic squelch section of tube V105.

1-16. RECEIVER CHASSIS CONTROLS. (See figure 1-7.)

a. Test Jack J101. Provides a means of measuring the cathode current of the 1st if amplifier tube for test and alignment purposes.

b. Capacitor C141. Tunes the r-f grid circuit for channel 1.

c. Capacitor C142. Tunes the r-f grid circuit for channel 2.

d. Capacitor C143. Tunes the r-f grid circuit for channel 3.

e. Capacitor C144. Tunes the r-f grid circuit for channel 4.

f. Capacitor C145. Tunes the r-f grid circuit for channel 5.

g. Capacitor C146. Tunes the oscillator-mixer grid

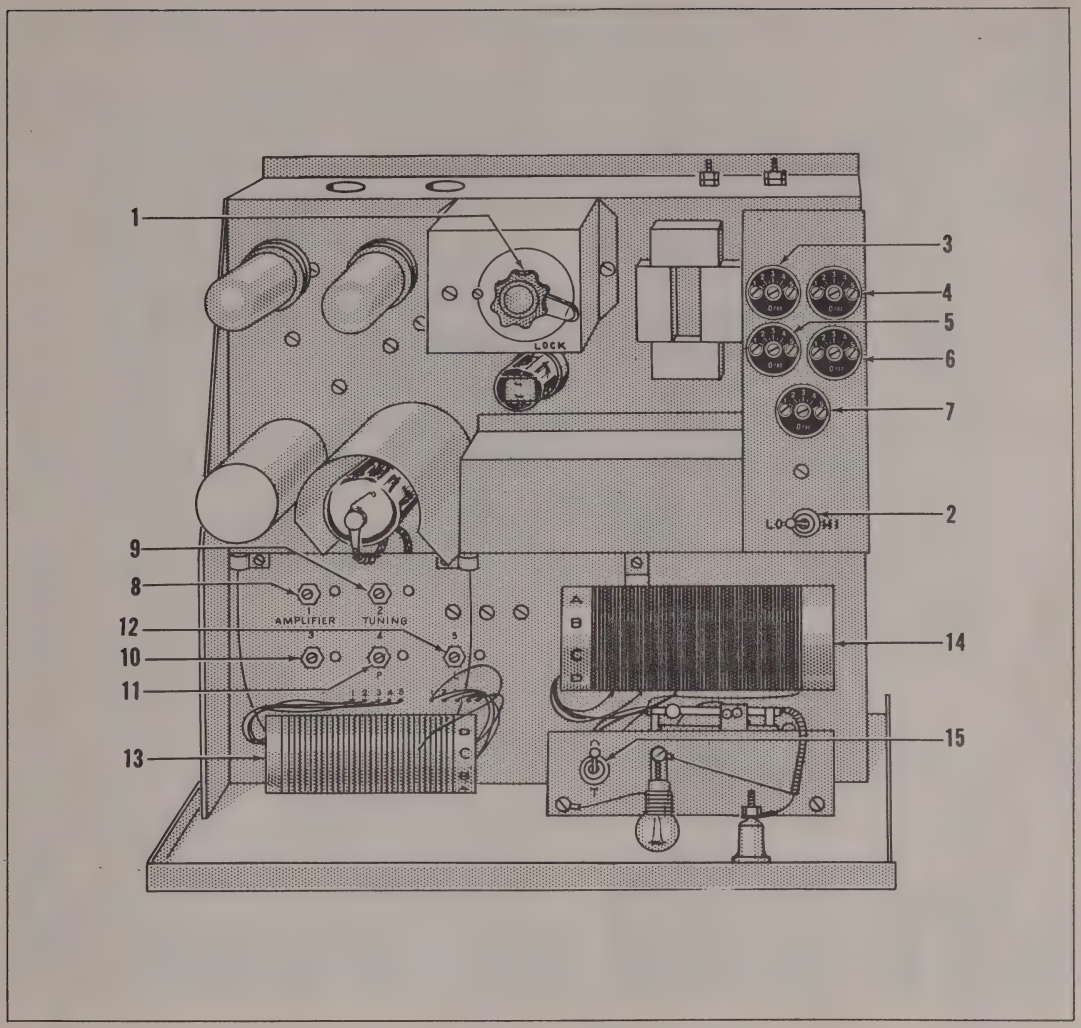

1. Capacitor C27
2. HI-LO Switch S6
3. Capacitor C21
4. Capacitor C22
5. Capacitor C23
6. Capacitor C24
7. Capacitor C25
8. Capacitor C1
9. Capacitor C2
10. Capacitor C3
11. Capacitor C4
12. Capacitor C5
13. Power-Amplifier Tank Coil L1
14. Antenna Series Loading Coil L2
15. T-O Switch S3

Figure 1-5. Transmitter Chassis Controls

circuit for channel 1.

h. Capacitor C147. Tunes the oscillator-mixer grid circuit for channel 2.

i. Capacitor C148. Tunes the oscillator-mixer grid circuit for channel 3.

j. Capacitor C149. Tunes the oscillator-mixer grid circuit for channel 4.

k. Capacitor C150. Tunes the oscillator-mixer grid circuit for channel 5.

l. Capacitor C151. Oscillator frequency control for channel 5.

m. I-F Transformer T101. Couples the oscillator-

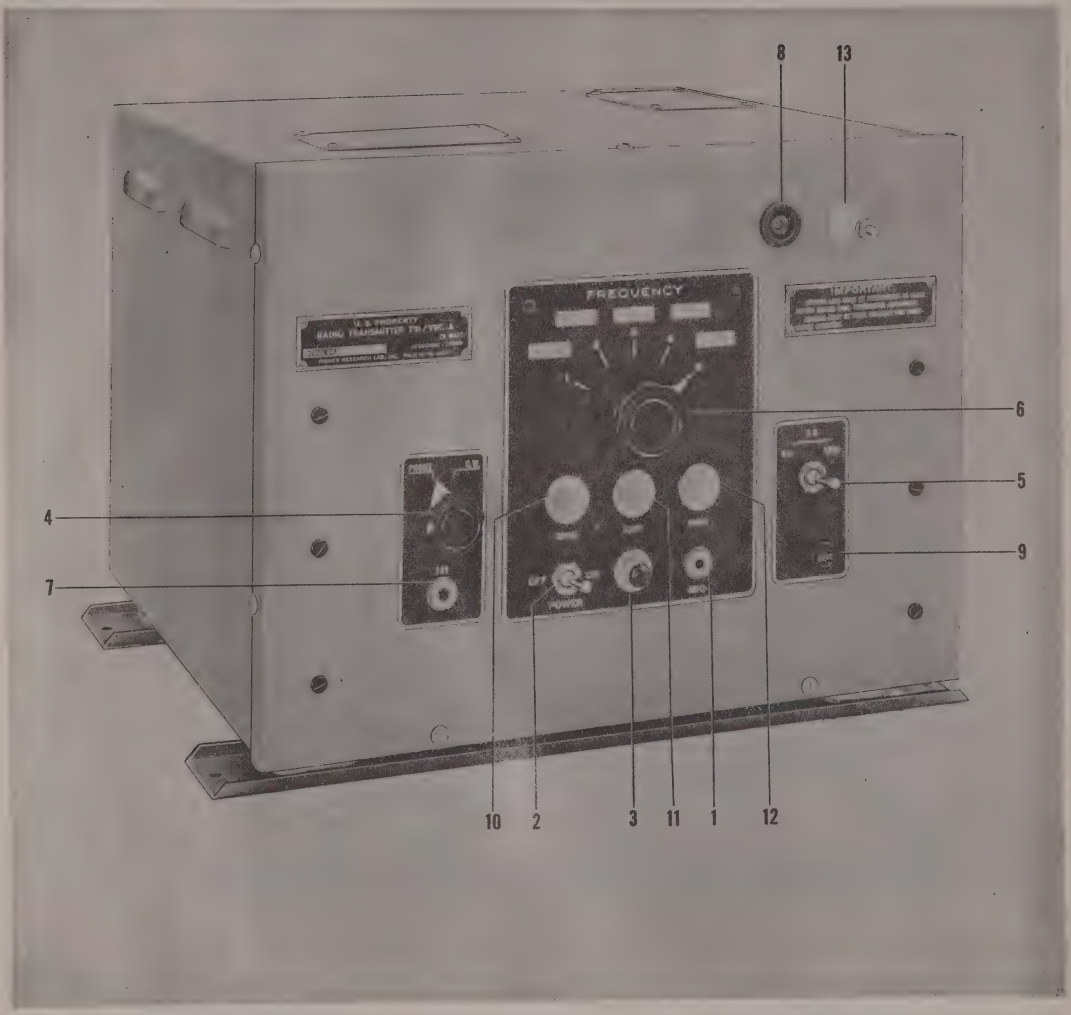

1. VOLUME Control, Variable Resistor R137 and Switch S102
2. Pilot Light E101
3. R.F. GAIN Control, Variable Resistor R138
4. B.F.O. ON-OFF Switch S103
5. FREQUENCY Selector Switch S101
6. Q ON-OFF Switch S104
7. ANT. TRIM Control, Capacitor C140
8. PHONES Jack J102
9. B.F.O. Tone Control, Capacitor C152
10. Q ADJ. Control, Variable Resistor R136

Figure 1-6. Receiver Front-Panel Controls

mixer tube to the 1st i-f amplifier tube. The coils have variable iron cores for tuning.

n. I-F Transformer T102. Couples the 1st i-f amplifier tube to the 2nd i-f amplifier tube. The coil has a variable iron core for tuning.

o. I-F Transformer T103. Couples the 2nd i-f amplifier tube to the 2nd detector-squelch tube. The coils have variable iron cores for tuning.

p. I.F. GAIN Control, Variable Resistor R135. Determines the gain of the 2nd i-f amplifier tube; it is used to compensate for loss of receiver gain through aging of the tubes.

q. Beat Frequency Oscillator Tuning Unit L111. Determines the frequency of the beat frequency oscillator. The coil has a variable iron core for tuning.

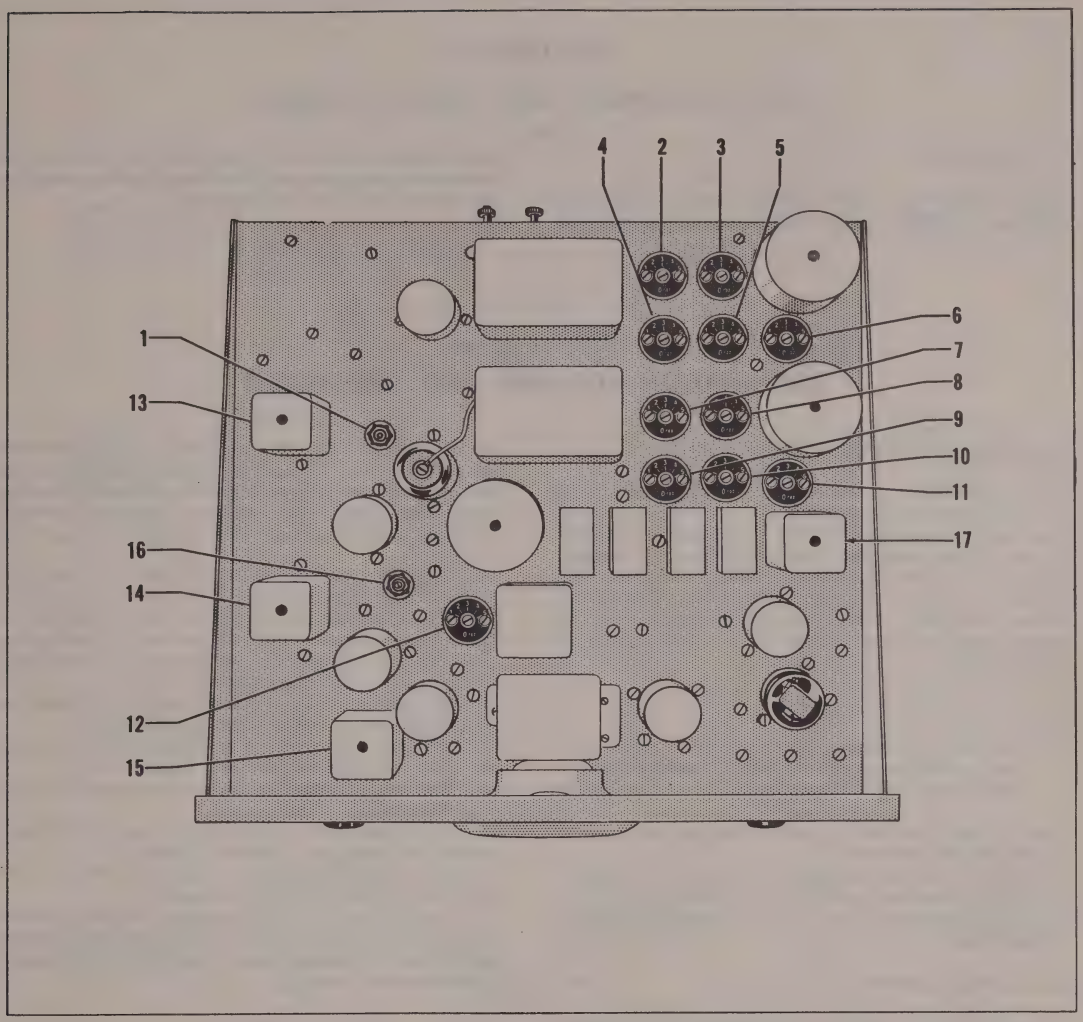

1. Test Jack J101
2. Capacitor C141
3. Capacitor C142
4. Capacitor C143
5. Capacitor C144
6. Capacitor C145
7. Capacitor C146
8. Capacitor C147
9. Capacitor C148
10. Capacitor C149
11. Capacitor C150
12. Capacitor C151
13. I-F Transformer T101
14. I-F Transformer T102
15. I-F Transformer T103
16. I.F. GAIN Control, Variable Resistor R135
17. Beat Freq. Oscillator Tuning Unit L111

Figure 1-7. Receiver Chassis Controls

SECTION II

TEST EQUIPMENT AND SPECIAL TOOLS

2-1. GENERAL.

2-2. No special tools or special test equipment has been procured for service, maintenance, or overhaul of this equipment. All components and items can be tested and otherwise serviced using conventional test and service tools and instruments.

SECTION III
PREPARATION FOR USE AND RESHIPMENT

3-1. UNCRATING PROCEDURE.

3-2. GENERAL. Observe the following points when uncrating the equipment:

a. Each component of this equipment has been packed in accordance with Specification ANP-13a. Running spares and accessories for a particular component will be found with that item in an inner carton. This carton is surrounded by a barrier and then enclosed in a second carton which has been crated in a cleated waterproof plywood box.

NOTE

In unpacking this equipment, be sure to remove the running spares and accessories before discarding the inner carton.

b. A packing list is in the waterproof envelope attached to the wooden container.

c. All items packed in the shipment have been fungus-proofed before leaving the factory. Exercise care to prevent damage to this coating during unpacking and installation.

3-3. INSTALLATION.

3-4. INSTALLATION OF TRANSMITTER AND RECEIVER. These units should be located with the view of establishing operating and servicing accessibility. Observe the following procedure during installation:

a. Sufficient clearance must be allowed at the rear of the cabinets for the power cables, ground lead, and interconnecting cables.

b. Fasten the cabinet mounting plates of each unit to the shelf or table to be used for support. The sets must be located so that the full support is on the shock mounting plates provided on the bottom of each component.

3-5. POWER SUPPLY UNITS. Make certain that the power supply unit or units furnished for use with this equipment is suitable as per the requirements listed in Section I. Conventional use and installation procedures apply for installing the power units.

3-6. INSTALLATION OF ANTENNAS.

3-7. INSTALLATION OF ANTENNA ASSEMBLY AS-170/VRC-4. No special precautions beyond the usual antenna considerations are necessary for this equipment. Specific instructions for installation should be sought in the applicable antenna assembly handbook.

3-8. INSTALLATION OF SINGLE-WIRE ANTENNA. A single wire antenna may be used as an alternate for Antenna Assembly AS-170/VRC-4 where desirable or where the whip antenna will not suffice. If installation of a single wire antenna is necessary, give particular attention to the following points:

a. The maximum length of the antenna including its lead-in section should not exceed 35 feet.

b. The antenna wire should be Brown and Sharpe gauge No. 12 or 14, solid or stranded copper wire.

c. The antenna must be adequately insulated at the supporting ends.

d. Keep the antenna and lead-in clear of all metal structures, guys, and electrical wiring.

e. Make a good soldered connection at the junction point of the lead-in and the antenna.

f. The lead-in entrance point on the wall must be through a ceramic bushing or feed-through insulator which has a long leakage path. Route the lead-in directly to the transmitter unit.

NOTE

If a previously installed antenna which exceeds an over-all length of 35 feet is to be used, it will be necessary to connect a fixed capacitor in series with the antenna lead to the transmitter. The series capacitor must be an air type and have a capacity of 100 to 250 uuf.

3-9. CONNECTION OF COMPONENTS. Figure 3-1 lists and explains the cables supplied as a part of this equipment. Point to point connections are established in this way, while Figure 3-2 shows the use and purpose of the cables for interconnecting components.

3-10. GROUNDING OF COMPONENTS. Ground terminals are provided on the rear of the transmitter and receiver chassis. Observe the following procedure for grounding the components:

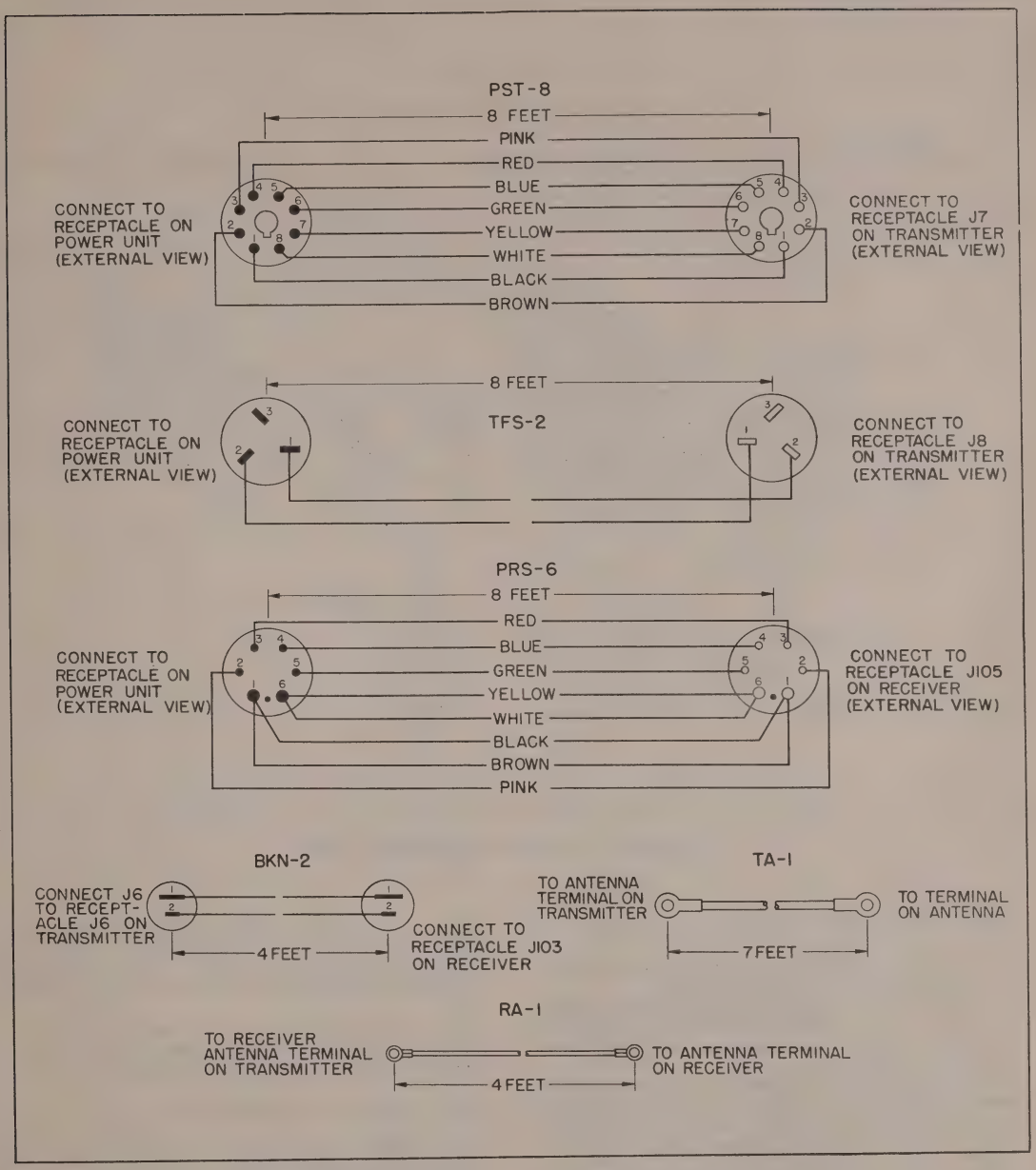

Figure 3-1. Interconnecting Cable Assemblies

a. Connect the chassis ground terminal of each unit to the frame or metal section of the vehicle's body. The ground leads should be as short as possible and proper electrical connections made at the points of contact.

b. If the equipment is being installed in a fixed station, connect the chassis ground terminal of each unit to a suitable ground. For best results a suitable ground consists of a copper wire (no smaller than Brown and Sharp gauge No. 14) buried in the earth.

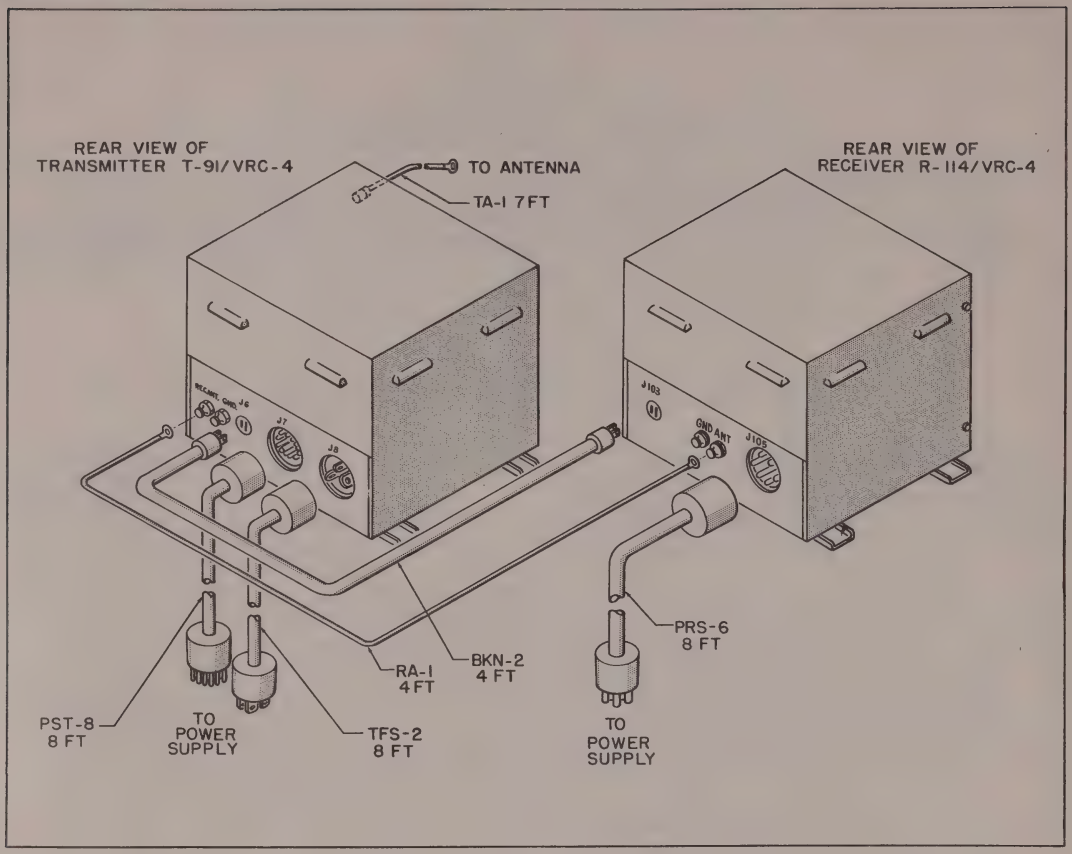

Figure 3-2. Intercomponent Cabling Diagram

3-11. PREPARATION FOR USE.

3-12. CHECK PROCEDURE. The complete installation should be carefully checked as follows:

a. Check all interconnecting cables and wiring. Insure that all cables are secured and protected against chafing.

b. Insure that the antenna and ground wire installations have been properly made.

c. For installations using Power Unit PU-49/VRC-4, check the condition of the battery. The equipment will not operate properly with a run-down or low-test battery. A hydrometer test should indicate a specific gravity of 1.250 or better.

d. Check the size, rating, and condition of all fuses. Securely tighten all fuses in their receptacles.

e. Remove the panel mounting screws on both the transmitter and receiver. There are seven panel mounting screws on each unit: two on each side edge, one on the top edge, and two along the lower edge of the panel. Slide the chassis forward and out of the cabinet. Check the plug-in components such as tubes and crystals for possible breakage. Check all tube top grid and plate connectors for firm connections. Check the tube base clamps and the crystal hold-down plates for firm mountings.

f. If operating frequencies are indicated for FREQUENCY selector switch positions 1 to 4, check the crystals for proper frequency and location.

3-13. PACKING THE EQUIPMENT.

3-14. GENERAL. To pack the equipment for reshipment, proceed as follows:

a. Remove all tubes and crystals from components.

b. Pack each tube and crystal separately.

c. Pack all accessories in one carton and surround with several layers of corrugated paper.

d. Place the component and the accessories in a cleated plywood box, then seal and waterproof the box.

SECTION IV
THEORY OF OPERATION

4-1. SYSTEM OPERATION.

4-2. GENERAL. Transmitter T-91/VRC-4, Receiver R-114/VRC-4, associated cable assemblies, and an appropriate source of power comprise a system for transmitting and receiving cw and voice (phone) signals. A switching relay in the transmitter permits the use of a common antenna by the transmitter and receiver. (See figure 4-1.)

4-3. The system may be operated from either a 6 volt, dc, or 110 volt, ac, power source. For operation from a 6 volt, dc, source, one external power unit with outlets for both the transmitter and receiver is used. For operation from a 110 volt, ac, source, two external power units are used, one for the transmitter and one for the receiver.

4-4. FUNCTIONAL OPERATION OF ELECTRONIC COMPONENTS.

4-5. TRANSMITTER T-91/VRC-4. (See figure 7-1.)

4-6. GENERAL. The transmitter is a four-tube AM type operating in the band between 1.7 and 8.7 megacycles. The frequency of operation is determined by any one of four crystal-controlled channels (1, 2, 3, and 4) or a tunable channel (5) which is variable between 4.0 and 7.0 megacycles.

4-7. Tube V4 (type JAN 6V6GT) and its associated circuit generates the carrier frequency. Tube V1 (type JAN 807) amplifies the r-f energy and feeds it through appropriate tuning circuits to the antenna. For voice operation, tubes V2 and V3 (type JAN 6L6) comprise a push-pull amplifier which modulates the plate current of V1.

4-8. CRYSTAL OSCILLATOR CIRCUIT. (See figure 4-2.) Oscillator tube V4 furnishes excitation for the power-amplifier circuit. A conventional tuned plate circuit is used.

4-9. The plate voltage for tube V4 is shunt-fed through coil L5, the coupling to the tuned circuit being achieved with capacitor C26. Grid resistor R2 provides the bias. The four crystals are selected by one section of FREQUENCY selector switch S1 and are connected through the movable contact of the switch to the oscillator tube grid. The screen grid voltage through resistor R3 and the plate voltage are both obtained from the same point on the voltage divider. The screen grid bypass capacitor is C18. The cathode return is through coil L4 to the keying circuit. The tuned plate circuit of the oscillator is coupled to the power-amplifier tubes grid through capacitor C14.

4-10. The tuned plate circuit for crystal-controlled operation uses coils L7 or L8 in conjunction with capacitors C21, C22, C23, or C24. Since crystal controlled operation is used on the first four positions of the FREQUENCY selector switch, only contacts 1 to 4 are associated with these circuits. The tuning capacitors (Nos. 1 to 4 on the top of the oscillator tuning unit) are permanently wired to one section of the selector switch while L7 and L8 are center-tapped and wired to another section.

4-11. The crystal frequency is determined as follows:

a. For an operating frequency in the range of 1,700 to 8,000 kc the crystal frequency is the same as the operating frequency.

b. For an operating frequency in the range of 8,000 to 8,700 kc, the crystal frequency is one-half the operating frequency. For example, if the operating frequency is 8,400 kc, the crystal frequency will be 4,200 kc. The oscillator plate circuit is tuned to the crystal frequency (in this case 4,200 kc) and the power-amplifier plate circuit is tuned to the operating frequency (8,400 kc).

4-12. VARIABLE FREQUENCY OSCILLATOR CIRCUIT. (See figure 4-3.)

4-13. The No. 5 position of the FREQUENCY selector switch provides variable frequency control of the oscillator over the range of 4,000 to 7,000 kc. The variable frequency control unit plugs into socket X2. The plug-in unit contains the components for the tuned grid circuit.

4-14. The tuned circuit consists of coil L10, variable capacitor C27, and fixed capacitor C28. C28 is a negative-coefficient type and is used to prevent drift with increasing temperature. Capacitor C29 in conjunction with capacitor C20 (not in the oscillator unit) form a capacitive divider for the feedback circuit. These two capacitors are effectively in parallel with C27 and C28 across the tuned circuit. C20 and C29 are both of the negative-coefficient type. The junction point of C20 and C29 connects to the oscillator tube cathode. Choke coil L4 is also associated with this circuit and provides a high impedance to radio frequencies between the cathode and ground.

4-15. The variable frequency tuned grid circuit covers 1,900 to 3,100 kc. The circuit oscillates throughout this range as a Colpitts oscillator with the screen grid of the tube acting as the plate. Coupling to the output circuit on the second and third harmonics of the oscillator fundamental frequency is through the electron stream to the plate, and is commonly called electron coupling. Coupling from the variable frequency tuned circuit to the oscillator tube's grid is through capacitor C19 which is connected to the grid circuit through FREQUENCY selector switch contact No. 5.

4-16. The tuned output circuit, which provides excitation to the power-amplifier tube's grid, consists of coil L6 and tuning capacitor C25 (No. 5 on top of the oscillator tuning unit). L6 is tapped to provide the required fre-

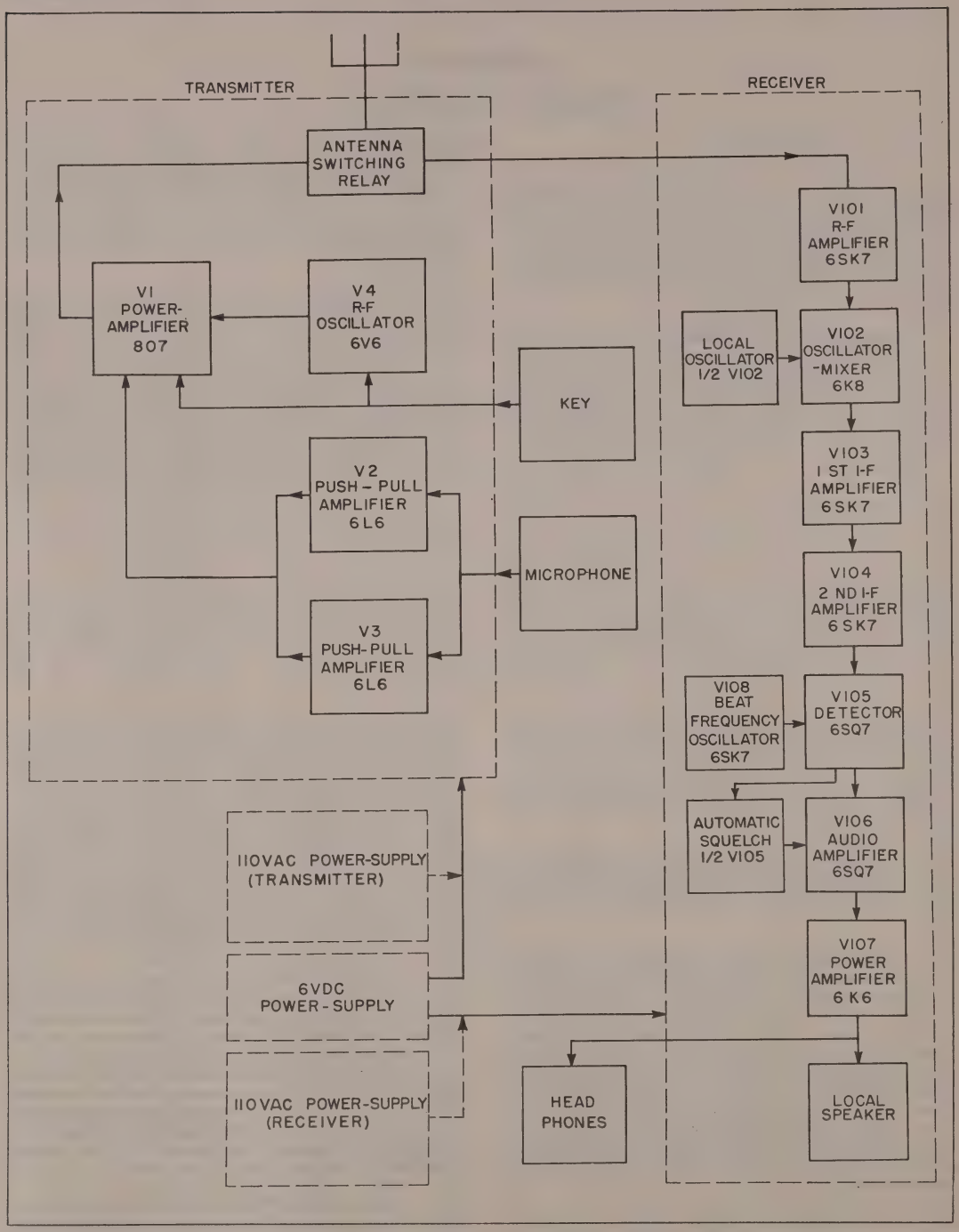

Figure 4-1. System Block Diagram

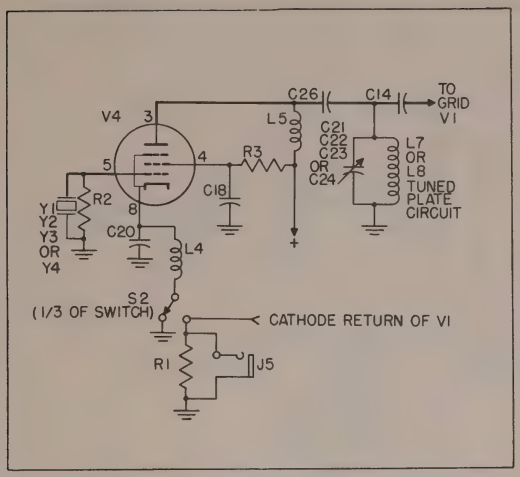

Figure 4-2. Transmitter Crystal Oscillator Schematic Diagram (Channels 1, 2, 3, and 4)

quency range of 4,000 to 7,000 kc. Switch S6 selects the range as follows:

Switch S6 Position	Tuned Output Circuit Frequency Range (kc)
LO (low)	4,000 to 6,000
HI (high)	6,000 to 7,000

For the "LO" position of S6, the output circuit tunes to twice (second harmonic) the oscillator grid circuit frequency. For the "HI" position of S6, the output circuit tunes to three times (third harmonic) the oscillator grid circuit frequency.

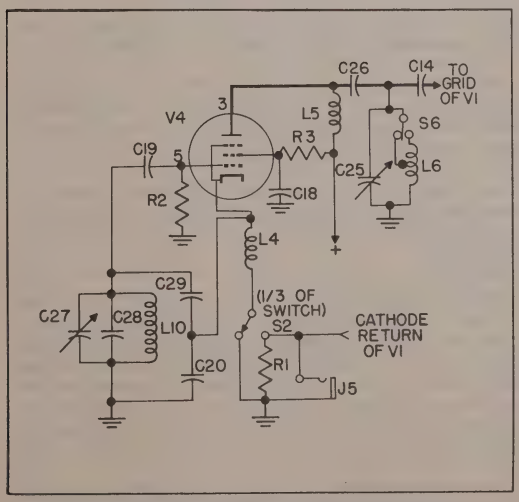

Figure 4-3. Transmitter Crystal Oscillator Schematic Diagram (Channel 5)

4-17. As an alternative to the variable frequency oscillator, crystal control of a fixed frequency may be used. To use crystal control for the No. 5 position of the FREQUENCY selector switch, remove the plug-in variable frequency control unit. A crystal unit of the same type used on the four crystal-controlled channels is plugged into socket X2. Use contacts No. 2 and 5 of the socket. The oscillator frequency range under this condition is determined by the position of switch S6 as follows:

Switch S6 Position	Oscillator Circuit Frequency Range (kc)
LO (low)	4,000 to 5,000
HI (high)	5,000 to 6,000

The operating frequency is the same as the crystal frequency and must be in the range of 4,000 to 6,000 kc.

4-18. R-F POWER-AMPLIFIER CIRCUIT. (See figure 4-4.)

4-19. R-f power-amplifier tube V1 is operated as a class C amplifier. Amplitude modulation is used for voice (phone) transmission. The plate and screen grid are modulated.

4-20. The circuit is conventional in design. The excitation coupling from the oscillator circuit is through capacitor C14. The voltage drop caused by the grid current flow through resistor R4 furnishes the grid bias. Additional protective bias is provided through cathode circuit resistor R10. Resistor R11 drops the screen grid voltage to the proper value and capacitor C11 bypasses the r-f voltage to ground. Capacitors C12 and C13 are used to bypass the cathode circuit. C13 is a mica capacitor; it maintains the cathode at ground potential for extremely high frequencies that may be present in the cathode circuit.

4-21. To facilitate the preliminary circuit adjustment and to protect the power-amplifier tube from possible overload, a special tune-operate circuit is used. The cathode return circuit from AMP jack J2 is through resistor R1 which is shunted by switch S3. When S3 is in the "T" (tune) position, the contacts are open and the cathode current flows through R1. The voltage drop across R1 provides additional grid bias which limits the plate current to a safe value. For normal operation of the transmitter, S3 is in the "O" (operate) position and R1 is short circuited.

4-22. For cw operation, PHONE-C.W. switch S2 modifies the circuit function of resistor R1 and switch S3 by opening the shorting circuit and applying the bias voltage to both power-amplifier tube V1 and the cathode of oscillator tube V2. For cw conditions when the key is open the amplifier tube is biased to limit the current to a safe value and the oscillator tube is blocked to stop oscillation. Closing the key restores the normal bias to both tubes. This is a simple and effective method of keying the transmitter for cw telegraph operation.

4-23. The power-amplifier tuned output (tank) circuit consists of coil L1 and variable capacitors C1 to C5. Each variable capacitor is connected to its respective

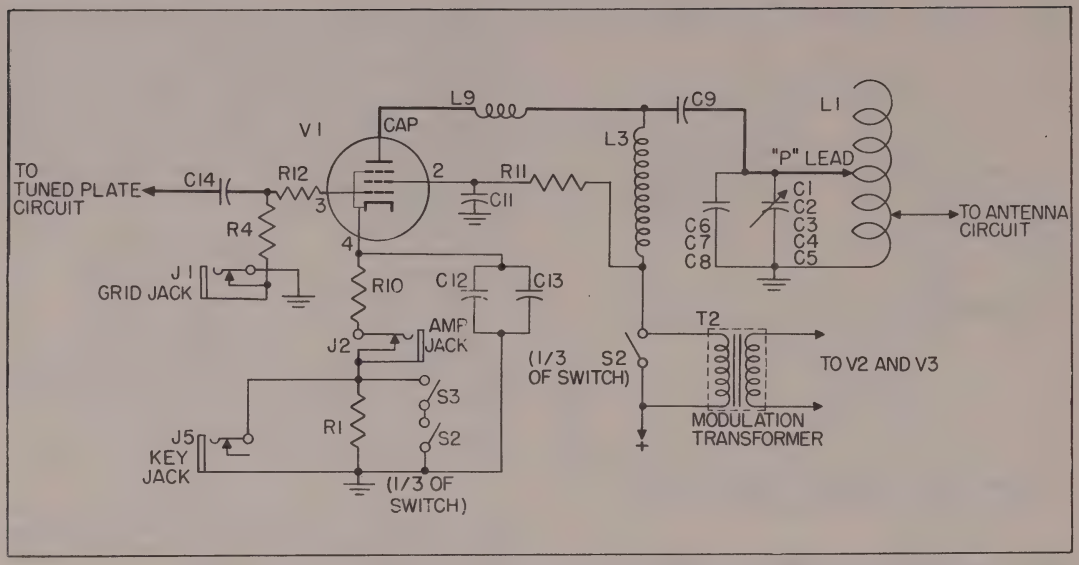

Figure 4-4. Transmitter Power-Amplifier Schematic Diagram

contact on a section of FREQUENCY selector switch S1. In addition there are three fixed air-type capacitors, C6, C7, and C8, which function as fixed shunt capacitors or padders across the tuned circuit. Each padder (fixed shunt) capacitor is connected to a separate section of the selector switch. To maintain the proper inductance-capacitance ratio throughout the frequency range of 1,700 to 8,700 kc, padders C6, C7, and C8 are connected in combinations for each position of the selector switch. For example, if the frequency range for selector switch position No. 1 is to be 1,700 to 2,500 kc, each padder is connected to the No. 1 contact of its respective switch section. All three are thus in parallel and connected across the tuned circuit. Any combination of the padders can be set up for each position of the selector switch.

4-24. The inductance required on coil L1 to resonate (tune) the power-amplifier output (tank) circuit is selected by individual coil leads for each position of FREQUENCY selector switch S1. These leads are marked "P", and are connected to their respective contacts on a section of the selector switch. For reference, each lead is numbered and color coded. A standard system of color coding is used for all leads associated with the tuned circuits in the equipment and is given here for reference:

Frequency Selector Switch Position	Lead No.	Lead Color
1	1	Green
2	2	Yellow
3	3	Blue
4	4	Brown
5	5	White

4-25. A shunt feed system of applying the d-c plate power to power-amplifier tube V1 is used. The rotors of all the tuning capacitors are at ground potential. Coil L3 functions as the plate feed r-f choke coil. The r-f power coupling from V1 to the tuned output circuit is achieved through plate blocking capacitor C9. Coil L9 is a small parasitic choke in series with the plate lead of V1.

4-26. AUDIO CIRCUITS. (See figure 4-5.)

4-27. For voice (phone) transmission, tubes V2 and V3 are used as push-pull Class AB modulators.

4-28. Microphone transformer T1 has a high step-up ratio (primary to secondary) and drives the grids of modulator tubes V2 and V3 directly. No additional speech amplifier stage is used.

4-29. The dc voltage for the microphone is obtained from the voltage drop across resistor R6. The a-f decoupling network consists of resistor R5 and capacitor C16.

4-30. The screen grid voltage for modulator tubes V2 and V3 is obtained from voltage divider circuit resistors R6, R7, R8, and R9. To improve the voltage regulation, the plate and screen grid voltages for the oscillator tube are obtained from the same point on the voltage divider. The screen grid circuit of the modulator tubes is bypassed for audio frequencies by capacitor C17.

4-31. The grid bias voltage for the modulator tubes V2 and V3 is obtained from the voltage drop across resistor R6.

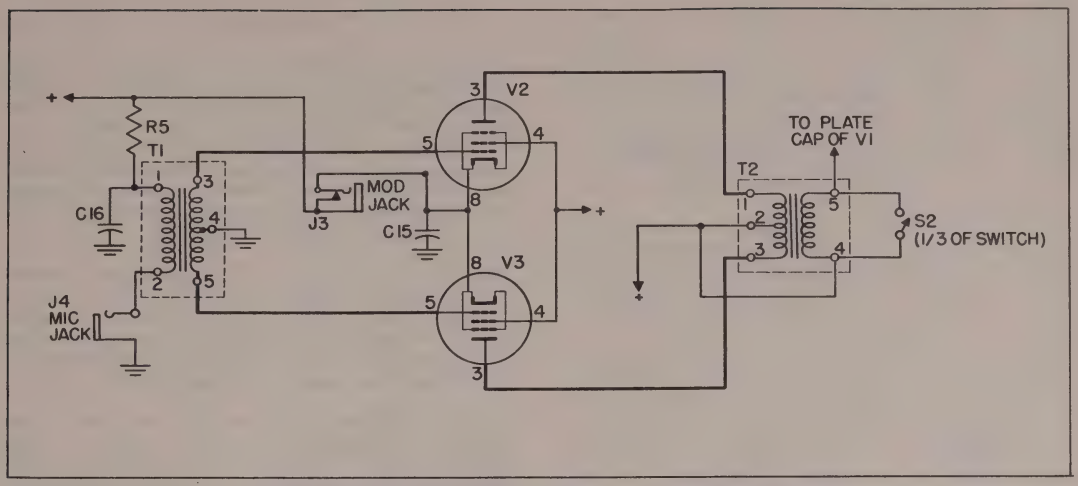

Figure 4-5. Transmitter Modulator Schematic Diagram

4-32. MOD jack J3 provides metering of the modulator tubes' cathode current. The cathode circuit is bypassed for audio frequencies by capacitor C15.

4-33. The plate voltage for modulator tubes V2 and V3 is fed through the primary winding center tap of modulation transformer T2. The audio-output voltage (modulation voltage) from the secondary winding of T2 is superimposed on the d-c plate voltage for the r-f power-amplifier which produces amplitude modulation of the carrier.

4-34. ANTENNA CIRCUIT. (See figure 4-6.)

4-35. The antenna system is resonated by connecting the "A" (antenna) leads for each operating frequency to the appropriate taps on coil L2. L2 provides matching to mobile whip antennas and fixed station single wire antennas approximately 30 to 35 feet long. In all cases the antenna system is a Marconi type with series inductive loading to ground. To function properly the antenna should be less than one-quarter wavelength long (capacitively reactive) at the operating frequencies. Length should not exceed 35 feet, see paragraph 3-8. The antenna, including its lead-in, may be exactly one-quarter wavelength long at the highest operating frequency. The location of the "A" leads on L2 will vary according to the length of the antenna with respect to the operating frequency. For short antennas or operating frequencies between 1,700 and 3,000 kc, the antenna will be considerably less than one-quarter wavelength long, hence a large amount of inductance (series loading) is required. For high frequencies, less inductance is required to resonate the antenna system.

4-36. The coupling (power-amplifier loading) is accomplished by adjusting the "L" (load) leads for each operating frequency to the tabs near the grounded end of coil L1. As the number of turns between the selected tab for the "L" lead and the end of the coil is increased, the coupling is increased.

4-37. R-f output indicator E2 indicates proper transmitter operation and adjustment. The neon bulb functions as a voltage indicator device and is capacitively coupled between the antenna circuit and ground. The glow intensity is a function of the r-f voltage and will vary according to the operating frequency and the length or type of antenna used.

4-38. Antenna change-over relay K3 transfers the antenna to either the receiver or transmitter.

4-39. RECEIVER R-114/VRC-4. (See figure 7-2.)

4-40. GENERAL. The receiver is an eight tube superheterodyne type. Four crystal-controlled channels (1, 2, 3, and 4) operate between 1.7 and 8.7 megacycles and one tunable channel (5) operates between 190 and 510 kilocycles. The intermediate frequency is 525 kilocycles.

4-41. Tube V101 (type JAN 6SK7) provides the one stage of r-f amplification. Tube V102 (type JAN 6K8) functions as the oscillator-mixer. Two stages of i-f amplification, tubes V103 and V104 (type JAN 6SK7), feed the signal to 2nd detector-squelch tube V105 (type JAN 6SQ7). The audio signal is amplified for a speaker or for headphones by tubes V106 (type JAN 6SQ7) and V107 (type JAN 6K6GT).

4-42. For cw reception, tube V106 (type JAN 6SK7) functions as the beat frequency oscillator. The output of the bfo is coupled to the diode plate of 2nd detector-squelch tube V105. Two automatic control circuits function during voice reception: automatic volume control and automatic squelch. Automatic volume control is developed by variable resistors R136 and R137. The Q or automatic squelch circuit uses the triode section of V105.

4-43. 1.7 TO 8.7 MEGACYCLE R-F AMPLIFIER CIRCUIT. (See figure 4-7.)

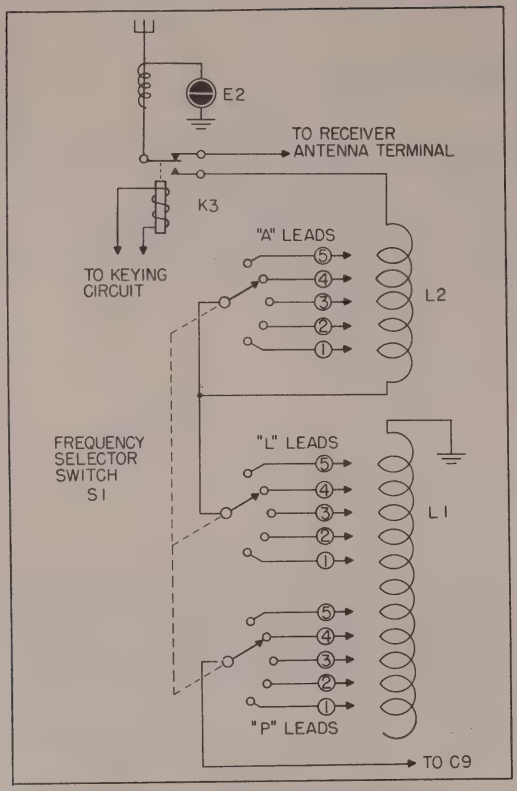

Figure 4-6. Antenna Tuning and Loading Schematic Diagram

4-44. Tube V101 amplifies the incoming r-f signal.

4-45. Coil L102, L103, or L104, depending on the setting of FREQUENCY selector switch S101, forms the transformer coupling for the incoming signal to the control grid of tube V101. Capacitor C141, C142, C143, or C144 tunes the grid circuit. The ANT TRIM control, capacitor C140, is a front panel control used to peak the grid circuit tuning. Resistor R101 and capacitor C103 filter the avc bias voltage. Capacitor C124 is the r-f bypass for the screen grid.

4-46. Resistors R133, R138, and R102 form a voltage divider network for the cathode. The R.F. GAIN control, variable resistor R138, manually controls the stage gain. The cathode bypass is capacitor C102. When the transmitter is keyed, relay K1 or K2, located in the transmitter, opens the cathode circuit.

4-47. Coil L106, L107, or L108, dependent on the setting of FREQUENCY selector switch S101, forms the transformer coupling for the output of tube V101 to the grid cap of tube V102. R134 is the plate decoupling resistor of V101; C104 and C105 are the plate decoupling capacitors.

4-48. 190 TO 510 KILOCYCLE R-F AMPLIFIER CIRCUIT. (See figure 4-8.)

4-49. For channel 5, the r-f amplifier is impedance coupled to tube V102. In all other respects the r-f amplifier circuit is the same as that used for channels 1, 2, 3, and 4.

4-50. Coil L101 and capacitors C131, C132, and C145 form the tuned grid circuit. The frequency range of 190 to 510 kc is covered in three specific ranges, which are determined by the connection of C131 and C132 across the tuned circuit as follows:

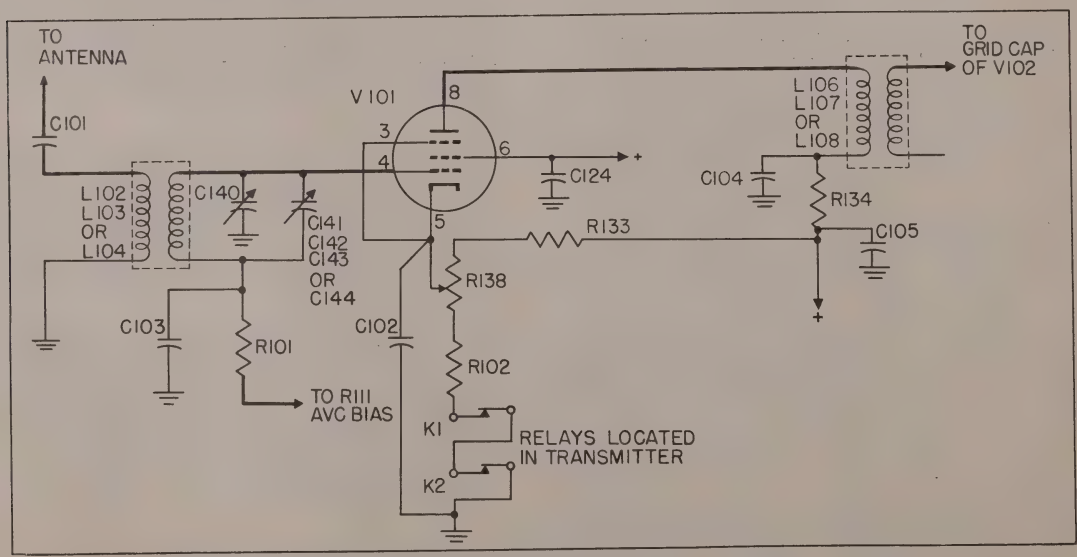

Figure 4-7. Receiver R-F Amplifier Schematic Diagram (Channels 1, 2, 3, and 4)

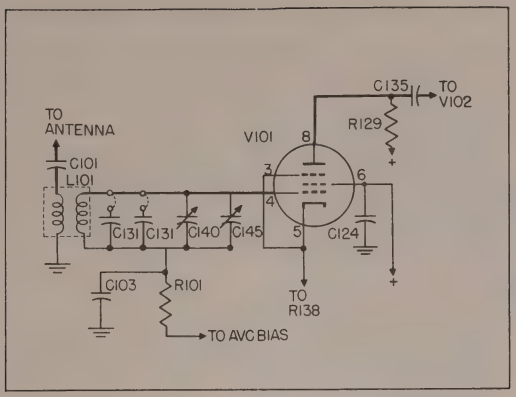

Figure 4-8. Receiver R-F Amplifier Schematic Diagram (Channel 5)

190 to 227 kc - Connect both C131 and C132
227 to 290 kc - Connect only C131
290 to 510 kc - Connect neither C131 nor C132

4-51. Resistor R129 and capacitor C135 form the impedance coupling network.

4-52. 1.7 TO 8.7 MEGACYCLE OSCILLATOR-MIXER CIRCUIT. (See figure 4-9.)

4-53. Tube V102 functions as oscillator and mixer for this frequency range (positions 1, 2, 3, and 4 of FREQUENCY selector switch S101). The oscillator section is a triode, the mixer section a hexode.

4-54. The secondary of coil L106, L107, or L108 couples the r-f signal to the grid cap of tube V102. Capacitor C146, C147, C148, or C149 tunes the grid circuit. Avc bias voltage is filtered by resistor R103 and capacitor C106. The screen grids are connected directly to the voltage divider. Cathode bias is developed by resistor R132 and capacitor C136. When the transmitter is keyed, relay K1 or K2, located in the transmitter, opens the cathode circuit.

4-55. The output of the hexode section of tube V102 is coupled to first i-f amplifier tube V103 by transformer T101. Resistor R125 in parallel with the tuned plate circuit, is used to give the desired selectivity characteristics.

4-56. The oscillator section of tube V102 is connected internally to the mixer section. For the 1.7 to 8.7 megacycle range the oscillator frequency is 525 kilocycles above or below the incoming r-f signal. This frequency is crystal controlled and no tuning is required.

4-57. Crystal Y101, Y102, Y103, or Y104 is coupled between the plate and the grid of the triode section of tube V102 by capacitor C107. Resistor R104 develops grid bias and coil L109 provides the plate load for the triode section of V102.

4-58. 190 TO 510 KILOCYCLE OSCILLATOR-MIXER CIRCUIT. (See figure 4-10.)

4-59. For this frequency range (position 5 of FREQUENCY selector switch S101) the input circuit to the oscillator-mixer changes. The other circuits are the same as those used in the 1.7 to 8.7 megacycle range.

4-60. Capacitor C135 couples the r-f signal to the

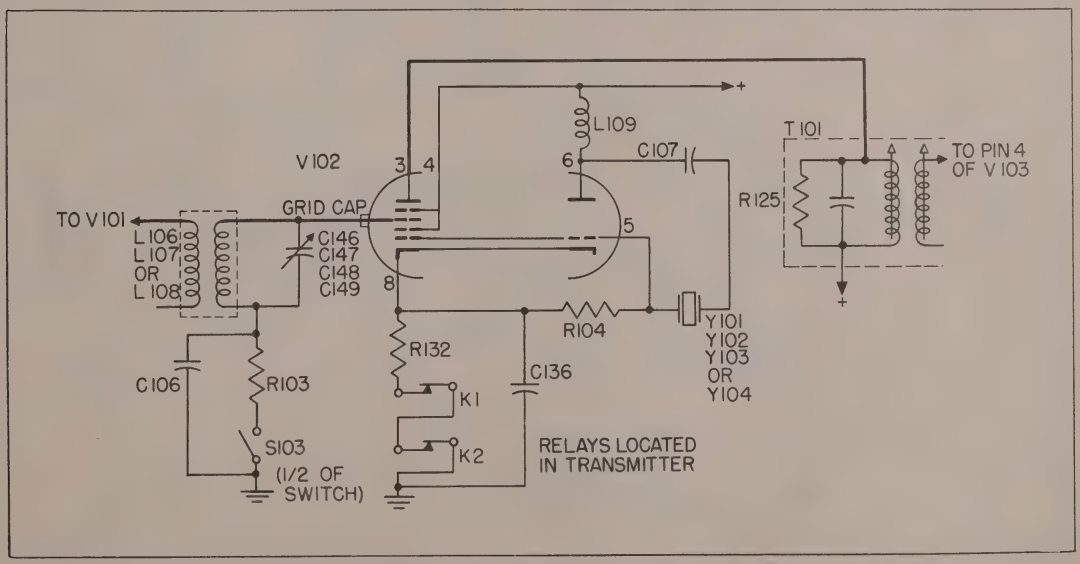

Figure 4-9. Receiver Oscillator-Mixer Schematic Diagram (Channels 1, 2, 3, and 4)

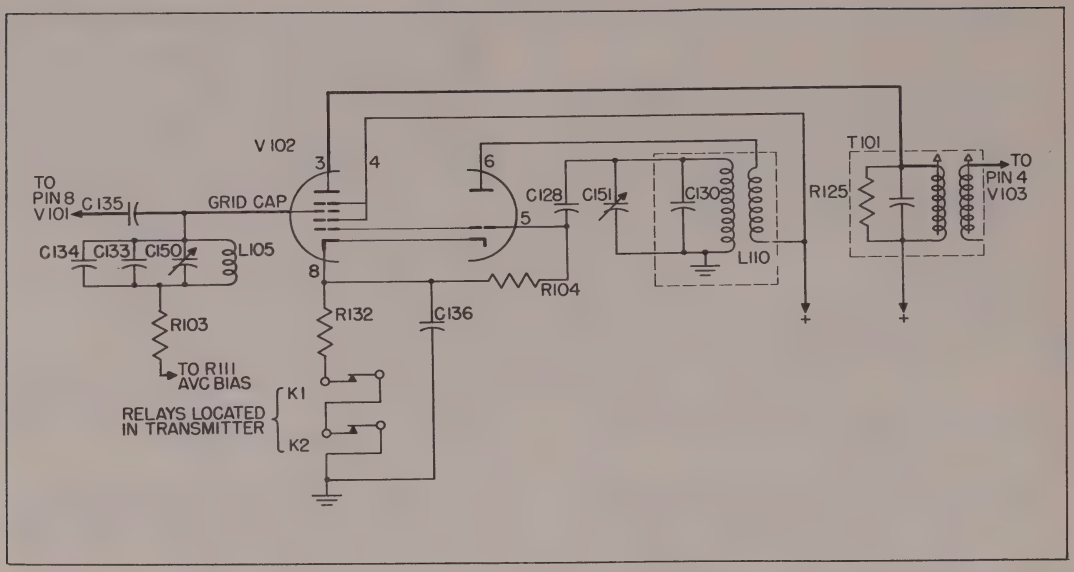

Figure 4-10. Receiver Oscillator-Mixer Schematic Diagram (Channel 5)

grid circuit. Coil L105 and capacitors C150, C133 and C134 form the tuned grid circuit. The frequency range of 190 to 510 kc is covered in three specific ranges which are determined by the connections of C133 and C134 across the tuned circuit as follows:

190 to 227 kc - Connect both C133 and C134
227 to 290 kc - Connect only C133
290 to 510 kc - Connect neither C133 nor C134

4-61. The oscillator section is tunable and the frequency is 525 kc above the incoming signal.

4-62. The grid of the triode section of tube V102 is coupled to the plate by oscillator unit L110, variable capacitor C151 and fixed capacitor C130 tune the grid circuit. The grid voltage is obtained from the tuned circuit by capacitor C128.

4-63. I-F AMPLIFIER CIRCUITS. (See figure 4-11.)

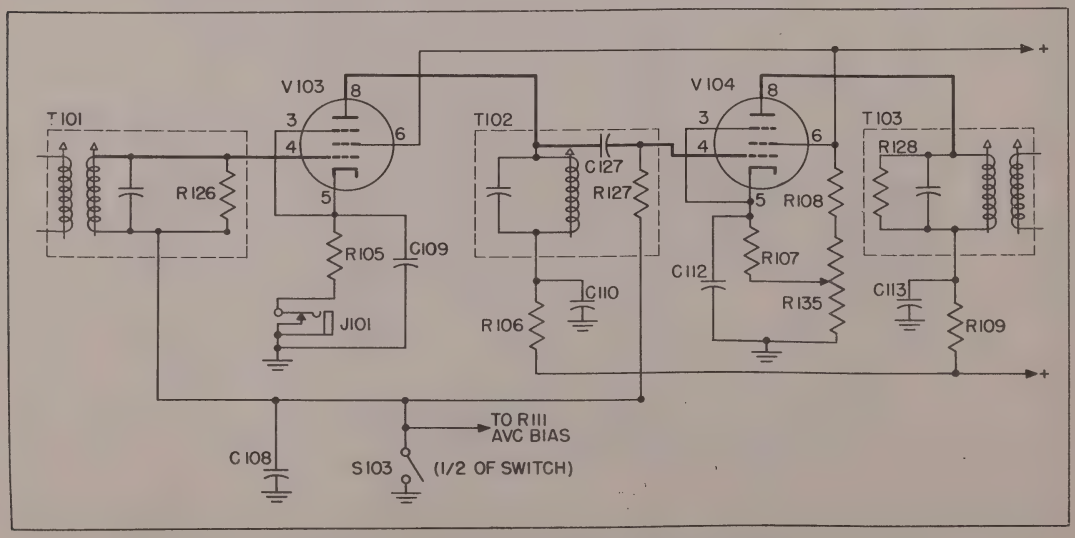

Figure 4-11. Receiver I-F Amplifier Schematic Diagram

4-64. The i-f amplifier section consists of a two-stage amplifier using tubes V103 and V104. The i-f frequency is 525 kc.

4-65. Tube V103 is coupled to the oscillator-mixer by transformer T101. Resistor R126 gives the desired selectivity to the tuned circuit. Capacitor C108 filters the avc bias which is applied to the control grid. Resistor R105 and capacitor C109 develop cathode bias. Jack J101, located on the chassis, uses the cathode current for alignment and adjustment of the r-f and i-f stages.

4-66. The output of tube V103 is impedance coupled to second i-f amplifier tube V104. Transformer T102 is the tuned plate circuit which is coupled to the next stage by capacitor C127. Resistor R106 and capacitor C110 decouple the plate circuit from the plate voltage supply.

4-67. Second i-f amplifier tube V104 receives its bias voltage through resistor R127. Resistor R108 and variable resistor R135 form a voltage divider for cathode bias control. The i-f amplifier gain control, R135, adjusts for loss of gain through aging of the tubes. Resistor R107 and capacitor C112 develop cathode bias and form the cathode return circuit.

4-68. Resistor R128 is placed in parallel across the tuned plate circuit (the primary of transformer T103) to give the desired selectivity. Plate decoupling resistor R103 is bypassed by capacitor C113.

4-69. 2ND DETECTOR-SQUELCH AND 1ST AUDIO AMPLIFIER CIRCUITS. (See figure 4-12.)

4-70. Detector tube V105 is a combination diode and triode. The diode section functions as a detector while the triode section is associated with the automatic squelch or quieting circuit.

4-71. The diode output (audio voltage) is developed across variable resistor R137 which functions as the volume control. A controlled portion of the voltage developed across R137 is coupled to the following stage (tube V106) through capacitor C116.

4-72. The triode section of tube V106 functions as an audio voltage amplifier and is resistance-capacitance coupled to output tube V107. This stage is also associated with the automatic squelch or quieting circuit.

4-73. AUTOMATIC SQUELCH CIRCUIT. (See figure 4-13.)

4-74. This circuit prevents continual noise from being present during standby periods. The action of the circuit is to bias the control grid of tube V106 beyond cut-off during standby periods.

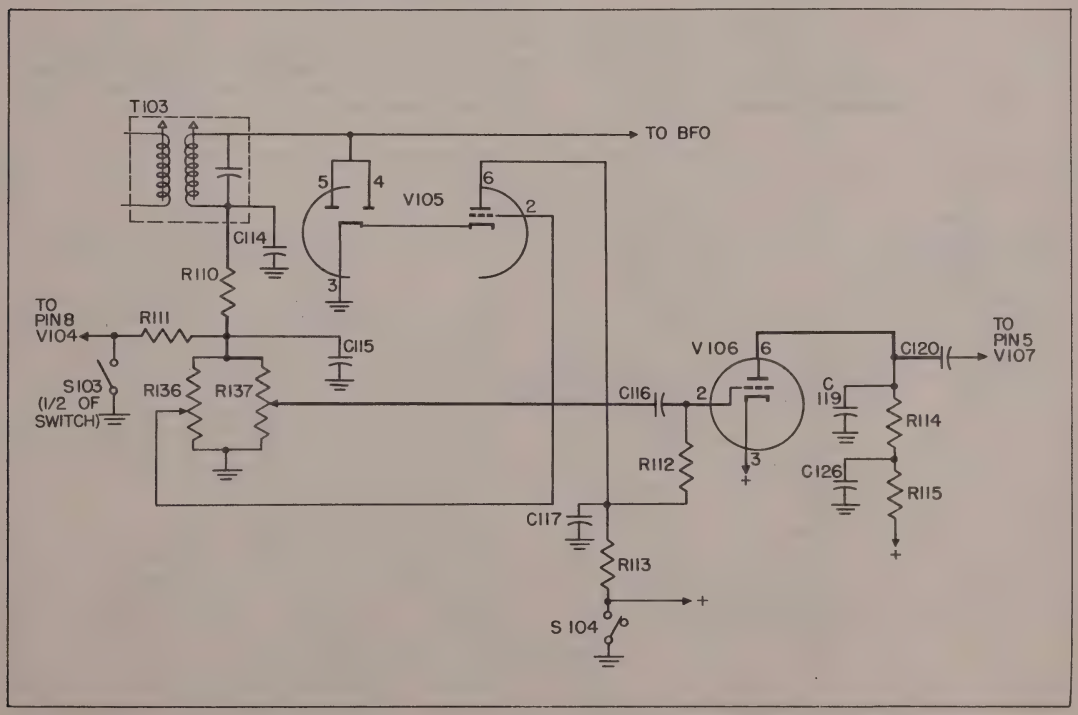

Figure 4-12. Receiver 2nd Detector-Squelch and 1st Audio Amplifier Schematic Diagram

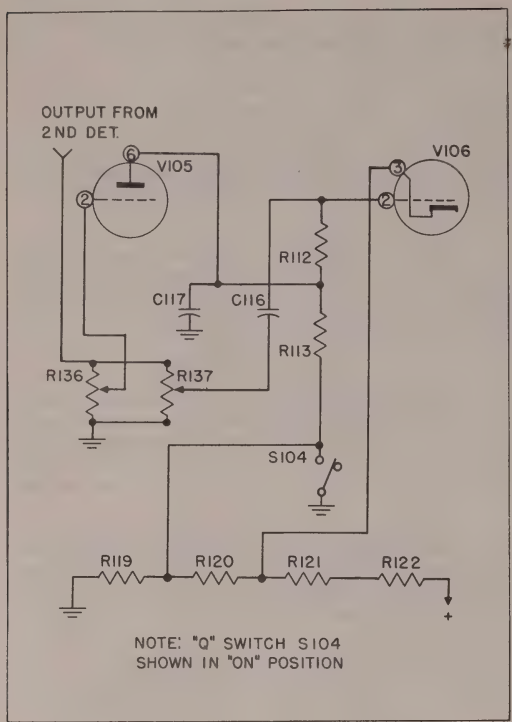

Figure 4-13. Receiver Automatic Squelch or "Q" Schematic Diagram

4-75. The blocking bias is developed by applying a small positive voltage to the triode plate of tube V105 through resistor R113. Because of the plate current flow through R113 when no signal is being received, a negative bias is applied to the grid of V106. When a signal is received, the grid of V105 is biased by the voltage developed across variable resistor R136 (same voltage used for the avc circuit) which stops the current flow through R113 and restores V106 to normal operation. The effectiveness of the action is determined by the bias voltage applied to the grid of V105 through adjustment of R136. With the control set for maximum voltage across R136, the circuit will respond to weaker signals. Conversely, with the control set for minimum voltage across R136, a stronger signal is required to produce the bias voltage. Capacitor C117 bypasses to ground any a-c voltage appearing in the plate circuit of V105.

4-76. For certain operating conditions the Q circuit may not be required, in which case the grid return circuit of tube V106 is connected to ground by closing switch S104 ("OFF" position).

4-77. AUTOMATIC VOLUME CONTROL CIRCUIT. (See figure 4-14.)

4-78. For voice (phone) reception, automatic volume control is used. This provides maximum receiver sensitivity to weak signals and prevents over-loading of the circuits on strong signals. The avc bias is applied to the r-f and i-f stages.

4-79. Because of the action of the diode section of tube V105, a d-c voltage (avc voltage) is developed across variable resistors R136 and R137. This voltage is applied through resistor R111 to each preceding stage.

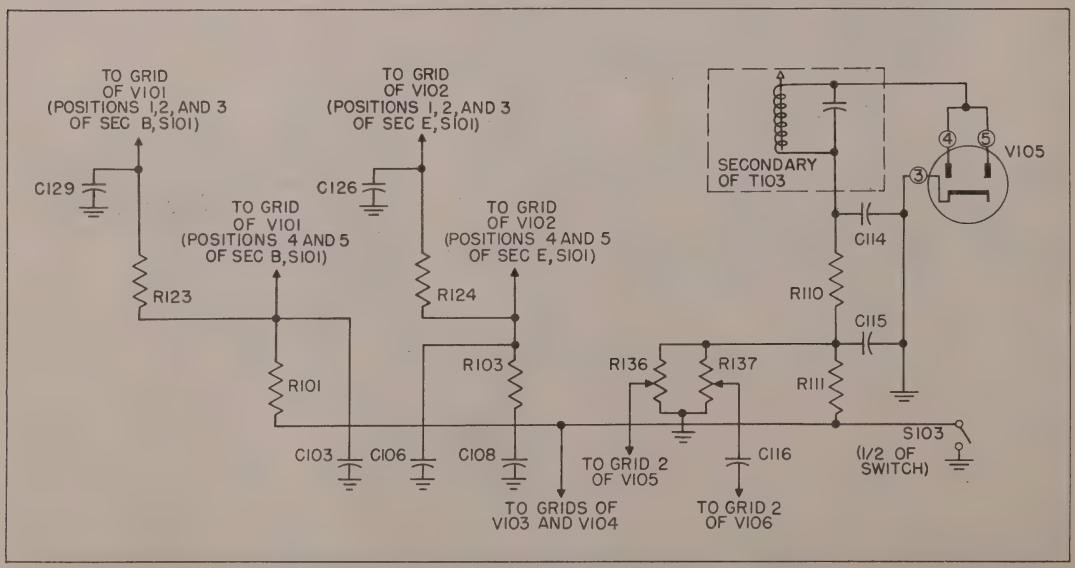

Figure 4-14. Receiver Automatic Volume Control Schematic Diagram

The bias thus developed at the tubes' grids controls the gain of the rf and if stages and is a function of the strength of the received carrier. Resistors R128, R101, R124, and R103 together with capacitors C129, C103, C126, C106, and C108 filter the avc voltage for the various stages.

4-80. The avc circuit is not used for cw telegraph reception and is made inoperative when switch S103 is closed ("ON" position).

4-81. 2ND AUDIO AMPLIFIER CIRCUIT. (See figure 4-15.)

4-82. Tube V107 is a power-amplifier pentode. The output of this stage is coupled through transformer T104 to the speaker voice coil. Cathode bias is developed across resistor R117 and the a-f current is bypassed by capacitor C121. For headphone operation, the audio voltage developed across the primary of transformer T104 is coupled through capacitor C123 to resistor R118 which attenuates the signal to a lower level. When the headphones plug is connected to PHONES jack J102, the voice coil circuit is opened and the headphones made operative.

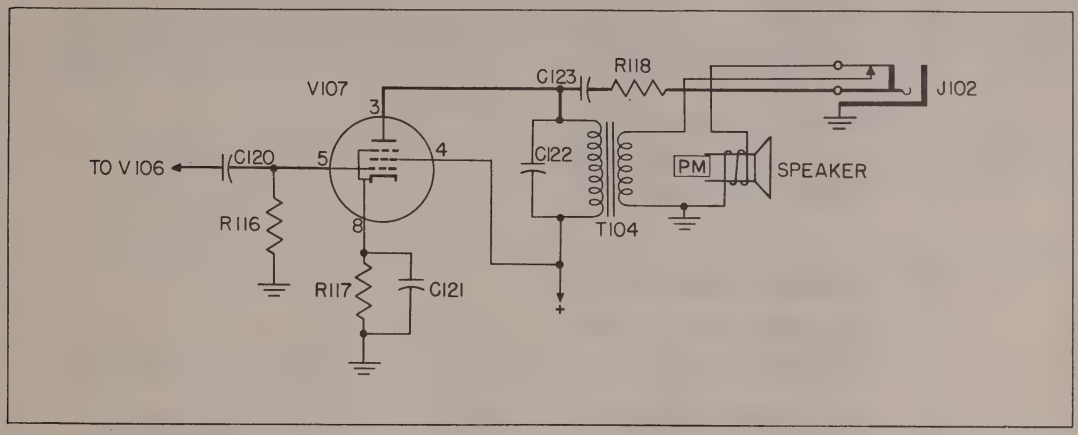

Figure 4-15. Receiver 2nd Audio Amplifier Schematic Diagram

4-83. BEAT FREQUENCY OSCILLATOR CIRCUIT. (See figure 4-16.)

4-84. Tube V108 functions as an oscillator to produce an r-f voltage which is coupled through capacitor C153 to the diode plate of detector tube V105.

4-85. The tuned circuit for the oscillator consists of bfo tuning unit L111 and capacitors C137 and C152. L111 is tapped for connection to the cathode of tube V108, which provides the feedback circuit for oscillation. V108 is connected for triode operation (plate, suppressor grid, and screen grid connected). The plate voltage is fed through resistor R131 which is bypassed by capacitor C139. Switch S103 in the "ON" position (closed) applies plate voltage to V108 and also grounds the avc circuit.

4-86. To produce a zero beat with the received signal, the oscillator is adjusted to produce a frequency of 525 kc by varying the inductance of bfo tuning unit L111. Variable capacitor C152 is shunted across part of L111 and changes the oscillator frequency by an amount which produces an a-f beat from the cw signal. The tone or pitch of the beat note is determined by the difference between the bfo frequency and the i-f frequency. C152 functions as the bfo front-panel control, labeled "B.F.O.".

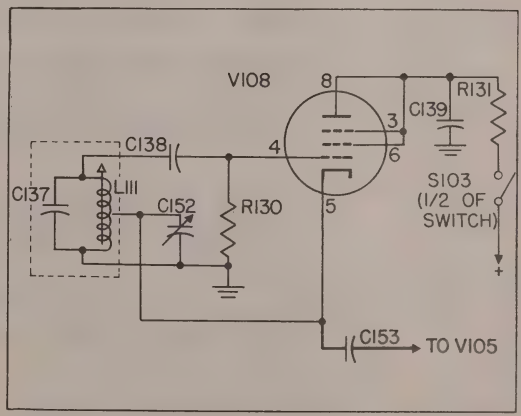

Figure 4-16. Receiver Bfo Schematic Diagram

SECTION V

OPERATIONAL AND ORGANIZATIONAL MAINTENANCE

5-1. MINIMUM PERFORMANCE STANDARDS.

5-2. GENERAL. The following check charts are tabular forms of indications, readings, and tests; they serve as minimum standards of performance for their respective components. A test meter for measuring direct current is required, and a plug, (SigCorp Type PJ-055B or equivalent) is necessary to fit the panel jacks. Meter test leads must connect the positive meter terminal to the plug tip.

5-3. TRANSMITTER CHECK CHART. (See figure 1-4.) Observe the following procedure when checking the transmitter.

NOTE

Whenever possible perform all transmitter checks and tuning operations with a dummy antenna or in a screen room to prevent radiation. (See NOTE, paragraph 6-3.) No special instructions are necessary for screen room operation.

STEP	CONTROL POSITIONS	CHECK
1.	POWER switch to "ON".	Pilot Light E3 lights. All tube filaments heat.
2.	PHONE-C.W. switch to "C.W.". REC.-SEND switch to "SEND".	Receiver silenced.
3.	FREQUENCY selector switch to channel "1". Insert telegraph key in KEY Jack and close contacts.	R-F Indicator E2 lights. Test meter indicates 2 - 4 ma at GRID Jack. Test meter indicates 85 - 100 ma at AMP Jack.
4.	FREQUENCY selector switch to each channel.	Repeat checks of step 3.
5.	PHONE-C.W. switch to "PHONE". Insert microphone in MIC Jack and press button switch.	Repeat checks of step 3. Test meter indicates 70 - 75 ma at MOD Jack.
6.	Talk or whistle into microphone.	MOD Jack test meter indication increases to 80 - 90 ma.

5-4. RECEIVER CHECK CHART. (See figure 1-6.) Observe the following procedure when checking the receiver:

STEP	CONTROL POSITIONS	CHECK
1.	VOLUME control to extreme clockwise position.	Pilot Light E101 lights. All tube filaments heat.
2.	B.F.O. switch to "OFF". Q switch to "OFF". R.F. GAIN control to extreme clockwise position. FREQUENCY selector switch to channel "1".	Background noise.

STEP	CONTROL POSITIONS	CHECK
3.	Insert headphones in PHONES Jack.	Background noise transferred from speaker to headphones.
4.	Key transmitter.	No background noise while transmitting.
5.	Q switch to "ON".	No background noise.
6.	B.F.O. switch to "ON". Q switch to "OFF".	Background noise.
7.	FREQUENCY selector switch to each channel.	Repeat above steps.

5-5. SYSTEMS ANALYSIS.

5-6. GENERAL. This section contains trouble-shooting data and step-by-step procedures necessary to determine specific component, assembly, or sub-assembly failures.

5-7. To isolate a defective part or determine the cause of equipment failure requires a complete understanding of the equipment's function. Refer to the appropriate diagrams and figures before attempting any trouble-shooting.

5-8. No special test equipment is required for trouble-shooting the components. Connect the component in question to a power unit. Whenever possible use the 6 volt, d-c, power unit in preference to the 110 volt, a-c, power unit. When trouble-shooting the receiver in the absence of the transmitter, insure that the break-in circuit contacts of receptacle connector J103 at the rear apron of the receiver, are jumpered.

5-9. EQUIPMENT FAILURE. (For a more detailed trouble-shooting procedure see paragraph 6-9.)

5-10. If tubes are suspected to be the cause of a failure, the defective tube can usually be located by the following procedure.

a. Turn the power off and touch each tube. Any normal operating tube will feel warm or hot. A cold tube is a good indication of a failure.

b. Replace one tube at a time with a good tube and check the equipment for proper operation after each change.

c. If a tube checker is available, subject each tube to a performance test, short test, and gas or leakage test.

5-11. The crystals used in the transmitter and receiver usually do not cause equipment failure; however, if the set operates on all assigned frequencies but one, a defective crystal may be the cause of the trouble. The crystal holder should not be opened for repair unless it is absolutely certain that the crystal is inoperative. When repair is necessary see paragraph 5-19.

5-12. In case of equipment failure during normal operation the trouble should be localized first, i.e., the technician should determine from any apparent symptoms which component is defective. The following paragraphs will aid the operator in this process of localizing the trouble.

5-13. BOTH TRANSMITTER AND RECEIVER INOPERATIVE. Observe the following procedure for trouble-shooting:

a. Determine if the failure is due to a lack of power to both components. If so, the trouble is either in the power unit(s) or the source of power for the unit(s).

b. Check the entire antenna system, internal and external.

5-14. TRANSMITTER INOPERATIVE. Observe the following procedure for trouble-shooting:

a. Check fuse F1. (See figure 1-4.)

CAUTION

Turn the power off for this step.

b. Check the operation of relay K3. (See figure 5-1.)

c. See figure 7-1 for location of test points. Determine if the failure is due to a lack of power by measuring the filament voltage (+5.9 volts, d-c; 6.2 volts, a-c) at test point 10, pin 2 of connector J8, and/or the high voltage (+510 volts, d-c) at test point 4, pin 7 of connector J7.

d. Check the test meter indication (2 - 4 ma) at test point 1, GRID jack J1. If all channels give an abnormal indication, suspect oscillator tube V4. If some channels give an abnormal indication, replace the appropriate crystals and/or retune the channels by adjusting the appropriate oscillator and power-amplifier tuning controls (see paragraph 6-15). See paragraph 5-19 before disposing of defective crystals.

e. Check the test meter indication (85 - 100 ma) at test point 2, AMP jack J2. If all channels give an abnormal indication suspect power-amplifier tube V1. If some channels give an abnormal indication check the appropriate "P" lead (step c, paragraph 6-21) and "L" and "A" lead (see steps a and b, paragraph 6-23) connections and/or retune the channels by adjusting the appropriate power-amplifier tuning controls.

f. Check the test meter indication (70 - 75 ma with no modulation, 80 - 90 ma with modulation) at test point 5, MOD jack J3. If indication with no modulation (no audio input) is abnormal suspect modulator tubes V2 and V3. If indication with modulation (audio input) is abnormal suspect the microphone.

g. Check the antenna system.

5-15. RECEIVER INOPERATIVE. See figure 7-2 for location of test points. Observe the following

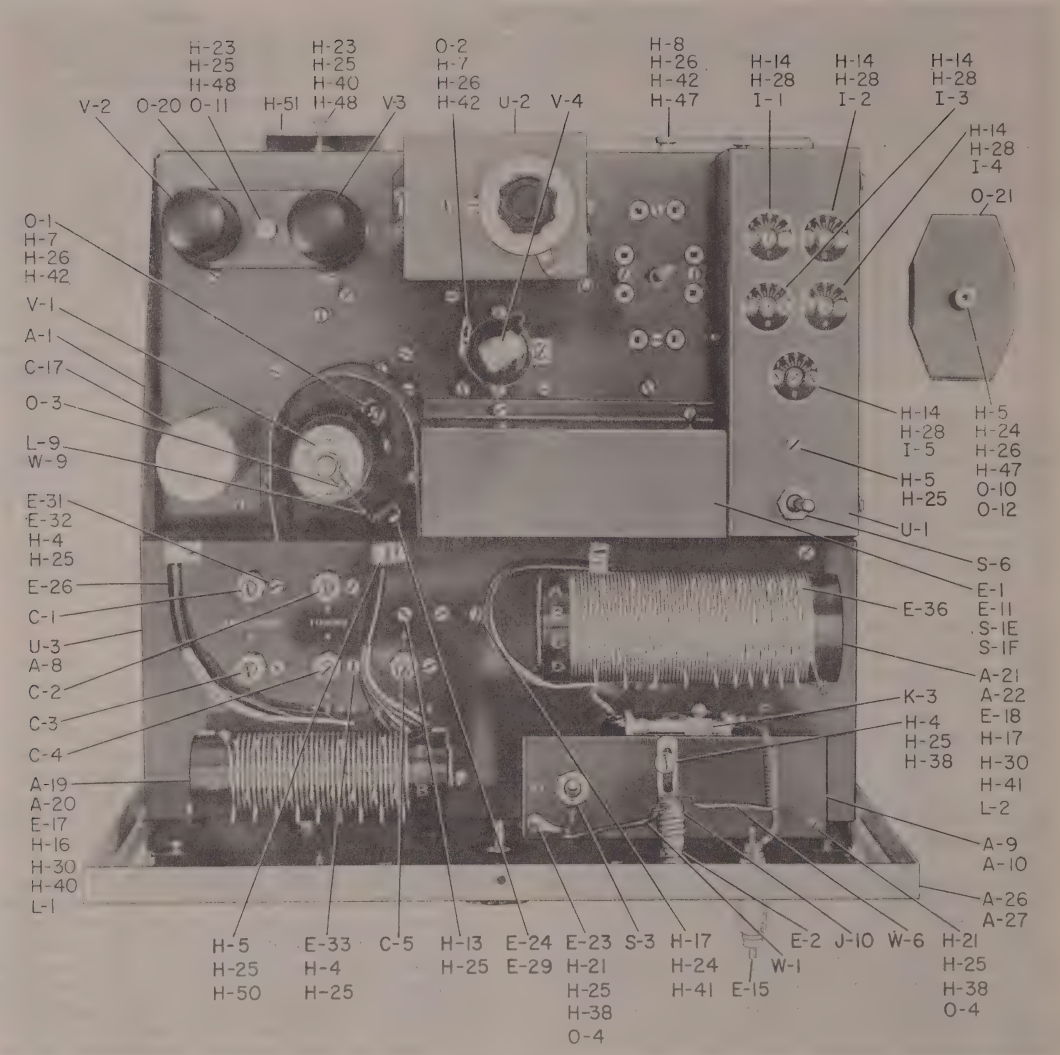

Figure 5-1. Transmitter Chassis, Top View

procedure for trouble-shooting:

a. Check the contacts of relays K1 and K2, located in transmitter. (See figure 5-1.)

b. Determine if the failure is due to a defective tube. (See paragraph 5-10.)

c. Determine if the failure is due to a lack of power by measuring the filament voltage (+5.9 volts, dc; 6.2 volts, ac) at test point 11, pin 1 of connector J105, and/or the high voltage (+210 volts, dc) at test point 8, pin 2 of connector J105.

d. If all channels are inoperative suspect the oscillator (triode) section of tube V102 first, all other tubes second. If some channels are inoperative, replace the appropriate crystals and/or retune the channels by adjusting the appropriate r-f and oscillator-mixer tuning controls. See paragraph 5-19 before disposing of defective crystals.

e. If all voice channels are operative yet all cw channels are inoperative, suspect beat frequency oscillator tube V108.

f. Check the antenna system.

5-16. If the checks and tests outlined above do not locate or remedy the trouble, it will be necessary to

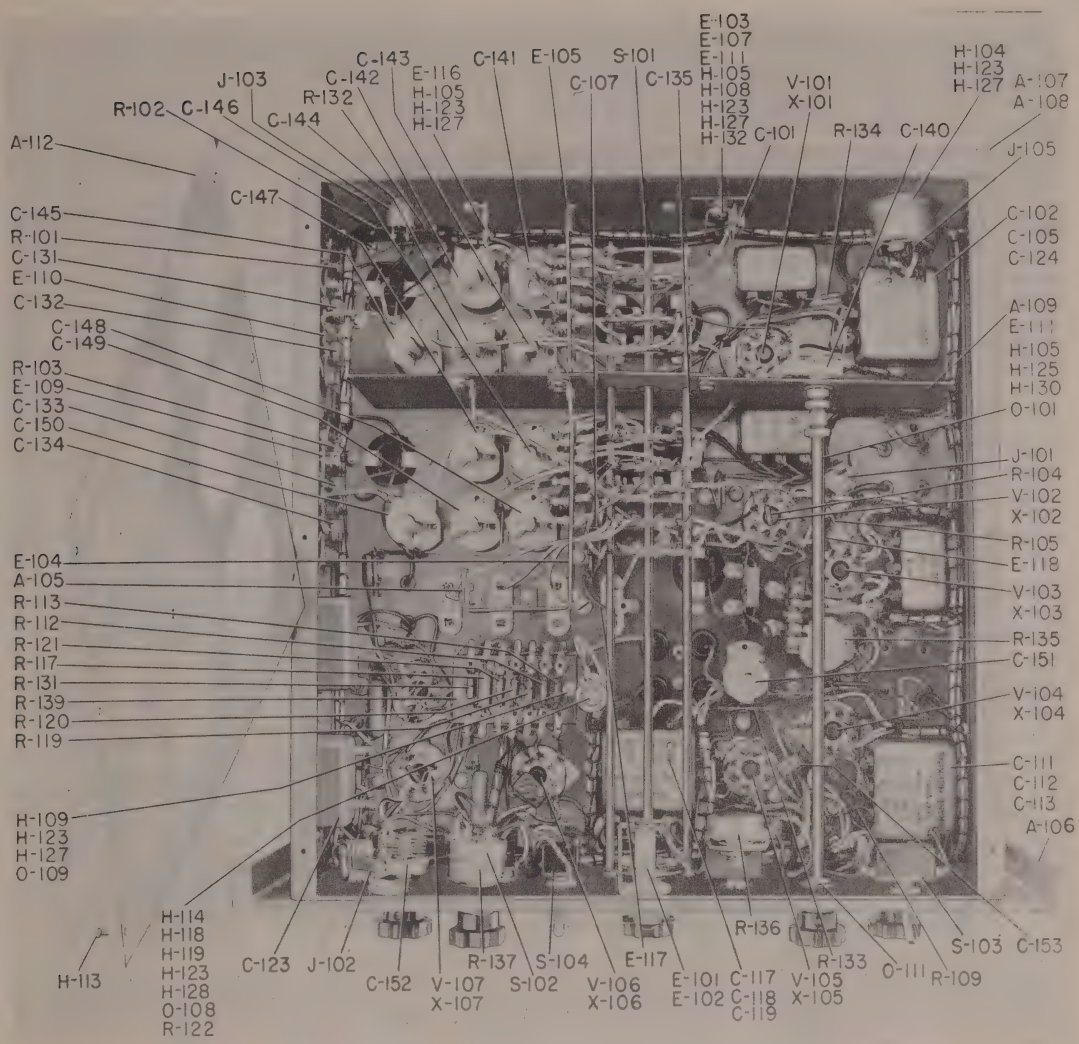

Figure 5-2. Receiver Chassis, Bottom View

disconnect and remove the defective component for repair. Any repairs or service requiring the replacement of parts should only be made by trained personnel thoroughly familiar with the equipment and adequately equipped for proper maintenance procedures.

5-17. MINOR REPAIR AND ADJUSTMENT.

5-18. GENERAL. All minor repairs such as replacement of the fuse, pilot lamps, tubes, assemblies, subassemblies, and allied parts are accomplished in a conventional manner.

5-19. CRYSTAL REPAIR. A defective crystal is sometimes caused by the accumulation of dirt within its holder. In this case the crystal can be repaired in the following manner:

a. Remove the cover screws and cover.

b. Carefully remove and inspect the crystal and electrodes. If the crystal is broken, i.e., has chipped corners or cracks, it must be replaced.

c. Hold the crystal by the edges (do not touch the surfaces) and wash it with soap and water, using a final clear-water rinse.

d. Wash the electrodes in the same manner.

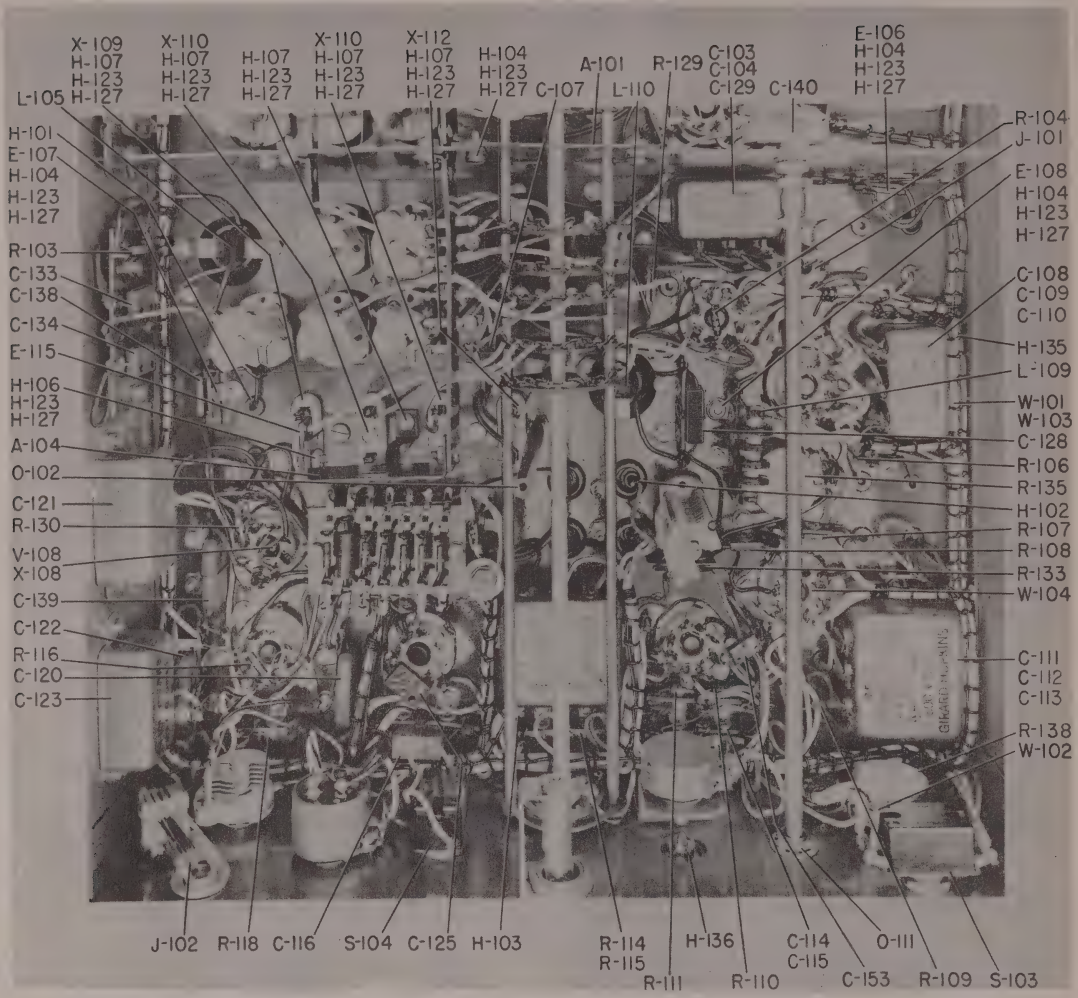

Figure 5-3. Receiver Chassis, Bottom View, Additional Showing

e. Dry the crystal and electrodes with a clean lint-free cloth.
f. Reassemble the crystal and electrodes in the holder.
g. Replace the cover and tighten the screws.

5-20. TRANSMITTER ADJUSTMENTS. (For a more detailed adjustment procedure see paragraph 6-15.)

5-21. Adjustment of the appropriate oscillator tank tuning control determines the amount of excitation (GRID test meter indication) to the power-amplifier grid circuit. For the no load (no antenna) resonance condition adjust the control for a meter indication of 2 - 5 ma. When the power-amplifier is properly loaded with an antenna, the grid current will decrease to 2 - 4 ma, the normal operating range.

NOTE

Turning the oscillator tank tuning control clockwise decreases the grid current; turning the control counter-clockwise increases the grid current. Too high a grid current may, in some cases, cause slow starting of the oscillator. Check this by rapidly operating the button switch on the microphone and noting the GRID jack test meter indication. For proper adjustment the oscillator should start instantly as evidenced by a GRID jack test meter indication each time the microphone button switch is pressed.

5-22. Adjust the appropriate power-amplifier tank tuning control for a minimum AMP jack test meter indication. For the no load (no antenna) resonance condition this dip should occur at 35 - 40 ma. When the power-amplifier is properly loaded with an antenna (paragraph 6-23) the current will increase to 85 - 100 ma, the normal operating range.

5-23. To test the modulation, set the test meter for 0 - 150 or 200 ma and connect meter to the MOD jack. Select any operating frequency. Press the button switch on the microphone and note the meter indication. The current for no modulation (no audio input) should be 70 - 75 ma. To modulate the carrier, talk into the microphone. The modulation current will increase on voice peaks to 80 - 90 ma. A sustained tone or whistle will give a good check for proper modulation. For best results hold the microphone close to the lips. Speak directly into the microphone in a normal tone of voice, dc not shout.

5-24. RECEIVER ADJUSTMENTS. (See figures 5-2 and 5-3.) For a more detailed adjustment procedure see paragraph 6-27.

5-25. When adjusting the receiver place the B.F.O. switch to "OFF" (unless a cw signal source is being used) and the Q switch to "OFF".

5-26. Adjustment of the rf and converter stage tuned circuits consists of peaking each circuit to the receiving frequency. Since the high frequency oscillator is manually tunable on channel 5, peaking of the output signal includes adjustment of oscillator tuning capacitor C151. (See figure 5-2.) Peaking of the rf and converter stages can be accomplished by any one of the following methods:

a. Tuning for maximum background noise when no signal source is available.

b. Tuning for maximum audio output when either a cw or modulated signal source is used.

c. Tuning for minimum indication on a 0 - 15 or 25 ma test meter inserted in jack J101 on the chassis when a signal source is used.

5-27. I-f transformers T101, T102, and T103, and tuning unit L111 are pre-set at the factory and should not be adjusted by technicians in an operational or organizational level of maintenance.

5-28. LUBRICATION.

5-29. GENERAL. Lubricate sparingly if at all. Do not lubricate the shaft bearings unless binding occurs; otherwise apply 1 drop of oil, specification MIL-O-5606, on the bearings if the shafts are rotated frequently. To apply the oil dip a number 22 wire 1/2 inch into the lubricant, withdraw and apply the drop where required. If necessary, lubricate the detent cams lightly with approved grease. Never lubricate the relays.

5-30. INSPECTION AND CLEANING SCHEDULE.

5-31. GENERAL. Observe the following procedure for periodic inspection and cleaning of the equipment:

a. The equipment must be kept clean. For mobile installations, remove the components from their cabinets and dust them at least once a week with a camel's hair brush. Care must be taken not to disturb or move any of the adjustments.

b. Every 2 or 3 months check the relays in the transmitter to see that the contacts are clean and free of any dirt or pitting. If necessary, the contacts may be cleaned with fine crocus cloth.

CAUTION

Bear lightly on the contacts so as not to roughen the surfaces. Do not bend or move the spring assembly out of line. Make certain that contacts are properly seated.

c. Clean contacts and detent cams on rotary switches every 512 hours with cleaning solvent specification P-S-661a.

SECTION VI

FIELD AND FASRON MAINTENANCE

6-1. MINIMUM PERFORMANCE STANDARDS.

6-2. GENERAL. The following check charts are tabular forms of indications, readings, and tests; they serve as minimum standards of performance for their respective components. A test meter for measuring dc is required, and a plug, (SigCorp Type PJ-055B or equivalent) is necessary to fit the panel jacks. Meter test leads must connect the positive meter terminal to the plug tip.

6-3. TRANSMITTER CHECK CHART. Observe the following procedure when checking the transmitter.

NOTE

Whenever possible perform all transmitter checks and tuning operations with a dummy antenna or in a screen room to prevent radiation. No special instructions are necessary for screen room operation. A dummy antenna consists of a 100 to 200 uuf air capacitor, a 37 or 73 ohm dummy antenna resistor, and an r-f ammeter (0-1 amp), all in series, connected from the antenna feed-through insulator to ground. The power output can be computed by substitution into the following formula: I^2R (antenna current squared multiplied by antenna resistance).

STEP	CONTROL POSITIONS	CHECK
1.	POWER switch to "ON".	Pilot Light E3 lights. All tube filaments heat.
2.	PHONE-C.W. switch to "C.W.". REC.-SEND switch to "SEND".	Receiver silenced.
3.	Set FREQUENCY selector switch to channel "1" and insert telegraph key in KEY Jack and close contacts.	R-F Indicator E2 lights. Test meter indicates 2 - 4 ma at GRID Jack. Test meter indicates 85 - 100 ma at AMP Jack. 25-watt power output.
4.	FREQUENCY selector switch to each channel.	Repeat checks of step 3.
5.	PHONE-C.W. switch to "PHONE". Insert microphone in MIC Jack and press button switch.	Repeat checks of step 3. Test meter indicates 70 - 75 ma at MOD Jack.
6.	Talk or whistle into microphone.	MOD Jack test meter indication increases to 80 - 90 ma.

6-4. RECEIVER CHECK CHART. Observe the following procedure when checking the receiver:

STEP	CONTROL POSITIONS	CHECK
1.	VOLUME control to extreme clockwise position.	Pilot Light E101 lights. All tube filaments heat.
2.	B.F.O. switch to "OFF". Q switch to "OFF". R.F. GAIN control to extreme clockwise position. FREQUENCY selector switch to channel "1".	Background noise.
3.	Insert headphones in PHONES Jack.	Background noise transferred from speaker to headphones.
4.	Key transmitter.	No background noise while transmitting.
5.	Q switch to "ON".	No background noise.
6.	B.F.O. switch to "ON". Q switch to "OFF". Couple an r-f signal generator of the proper frequency to antenna terminal on chassis. Adjust it for an unmodulated output.	Background noise. Beat note in headphones.

STEP	CONTROL POSITIONS	CHECKS
7.	FREQUENCY selector switch to each channel.	Repeat above steps for each channel.
8.	FREQUENCY selector switch to channel "3". Remove headphones from PHONES Jack. Adjust the signal generator for an output of 5 microvolts modulated 30% with a 400 cycle audio tone.	Audio output of approximately 50 milliwatts (0.45 volts) as measured by the a-c voltmeter across the speaker terminals. Signal-to-noise ratio of 3 to 1 or more. (See paragraph 6-38.)

6-5. SYSTEMS ANALYSIS.

6-6. GENERAL. This section contains trouble-shooting data and step-by-step procedures necessary to determine specific circuit failures.

6-7. To isolate a defective part or determine the cause of equipment failure requires a complete understanding of the circuit function. Refer to the appropriate diagrams and figures before attempting any trouble shooting.

6-8. No special test equipment is required for trouble-shooting either the transmitter or receiver. Connect the component in question to a power unit. Whenever possible use the 6 volt, dc, power unit in preference to the 110 volt, ac, power unit. When trouble-shooting the receiver in the absence of the transmitter, insure that the break-in circuit contacts of receptacle connector J103 are jumpered.

6-9. EQUIPMENT FAILURE. Observe the following procedure for trouble shooting:

a. Test each tube with a vacuum tube checker. Replace any "good" tubes which show cause to suspect as being defective.

b. Use the trouble-shooting charts (paragraphs 6-10 and 6-11) and the voltage and resistance charts (paragraphs 6-12 and 6-13) to isolate the defective part.

WARNING

Exercise care when making voltage measurements. High voltages that may be fatal are present in certain parts of the equipment.

6-10. TRANSMITTER TROUBLE SHOOTING CHART.

NOTE

Test points are labeled on the transmitter schematic diagram (figure 7-1) and the receiver schematic diagram (figure 7-2). See figures 6-1 and 6-2 for location of parts.

Step	Test Points	Control Positions	Check Procedure	Normal Indication	Possible Cause of Abnormal Indication
1.		POWER switch to "ON".	Observe Pilot Light E3 and tube filaments.	Pilot Light E3 lights. Tube filaments heat. If these indications are normal proceed to step 2.	Check: Switch S4. Connector J8. Pilot Light E3. If none of these elements is defective proceed to step 22.
2.		Controls set for cw operation. Rotate FREQUENCY selector switch and briefly depress key on each channel.	Insure that power-amplifier is properly loaded with an operating or dummy antenna. (See NOTE, paragraph 6-3.)	R-F Indicator E2 lights on all channels. If this indication is normal proceed to step 15.	If R-F Indicator E2 does not light on any channel check: Fuse F1. Relay K3. KEY Jack J5. Switches S2, S5. R-F Indicator E2. If none of these elements is defective proceed to step 3. If R-F Indicator E2 lights on some channels proceed to step 3.

TRANSMITTER TROUBLE SHOOTING CHART (cont)					
Step	Test Points	Control Positions	Check Procedure	Normal Indication	Possible Cause of Abnormal Indication
3.	1 GRID Jack J1.	Set FREQUENCY selector switch to any inoperative channel. Depress key briefly.	Check appropriate power-amplifier tank tuning lead "P", and appropriate antenna series load adjusting leads "L" and "A" for proper loading. (See paragraphs 6-21 and 6-23 respectively.) Measure current at test point 1, GRID Jack J1.	2-4 ma grid current.	If meter indication is normal or high proceed to step 4. If meter indication is low or zero proceed to step 8.
4.	2 AMP Jack J2.	No change in control positions. Depress key briefly.	Tune appropriate power-amplifier tank tuning capacitor for minimum current at test point 2, AMP Jack J2.	R-F Indicator E2 lights. 85-100 ma amplifier current (at dip) with proper load. If these indications are normal the transmitter is operative.	If meter shows an indication but no dip can be obtained check: Switch S1. Capacitor C9 (open). Coils L1, L2. Appropriate power-amplifier tuning capacitor and associated padder capacitor(s). If meter indication is low or zero proceed to step 5.
5.	3 Plate cap of power-amplifier Tube V1.	Remove key cable from KEY Jack.	Measure voltage at test point 3, plate cap of power-amplifier Tube V1.	+550 volts, dc.	If meter shows any indication other than zero volts proceed to step 6. If meter indication is zero volts check: Coil L3.
6.	A Pin 2 of power-amplifier Tube V1.	Replace key cable in KEY Jack. Depress key briefly.	Measure voltage at test point A, pin 2 of power-amplifier Tube V1.	+320 volt, dc.	If meter shows any indication on other than zero volts check: Capacitor C11 (open). If not defective proceed to step 7. If meter indication is zero volts check: Resistor R11. Capacitor C11 (shorted).
7.	B Pin 4 of power-amplifier Tube V1.	POWER switch to "OFF". Depress key.	Measure resistance at test point B, pin 4 of power-amplifier Tube V1.	200 ohms. If this indication is normal check: Capacitors C12 (open), C13 (open).	Check: Resistor R10. Capacitors C12 (shorted), C13 (shorted).

TRANSMITTER TROUBLE SHOOTING CHART (cont)

Step	Test Points	Control Positions	Check Procedure	Normal Indication	Possible Cause of Abnormal Indication
8.	1 GRID Jack J1.	No change in control positions. Depress key briefly.	Tune appropriate oscillator tank tuning control for proper current at test point 1, GRID Jack J1. (See paragraph 5-21.)	R-F Indicator E2 lights. 2-4 ma grid current. If these indications are normal the transmitter is operative.	Check: Switch S1. Appropriate crystal. (See paragraph 5-19.) Variable oscillator Control Unit (if channel 5 is inoperative). Appropriate oscillator tank tuning coil and capacitor. Resistors R4, R10, R12. If none of these elements is defective proceed to step 9.
9.	C Pin 3 of oscillator Tube V4.	No change in control positions. CAUTION Do not depress key while taking this voltage measurement.	Measure voltage at test point C, pin 3 of oscillator Tube V4.	+325 volts, dc.	If meter shows any indication other than zero volts proceed to step 10. If meter indication is zero volts check: Coil L5. Capacitor C26 (shorted). If none of these elements is defective proceed to step 10.
10.	D Pin 4 of oscillator Tube V4.	No change in control positions. Depress key briefly.	Measure voltage at test point D, pin 4 of oscillator Tube V4.	+180 volts, dc.	If meter shows any indication other than zero volts check: Capacitor C18 (open). Resistors R6, R7, R8, R9. If none of these elements is defective proceed to step 11. If meter indication is zero volts check: Resistors R3, R8 and R9 (open simultaneously). Capacitor C18 (shorted). If none of these elements is defective proceed to step 14.
11.	E Pin 8 of oscillator Tube V4.	POWER switch to "OFF". Depress key.	Measure resistance at test point E, pin 8 of oscillator Tube V4.	26 ohms. If meter indication is normal check: Capacitor C20 (open). If not defective proceed to step 12.	Check: Coil L4. (Capacitor C20 (shorted).
12.	F Pin 5 of oscillator Tube V4.	No change in control positions.	Measure resistance at test point F, pin 5 of oscillator Tube V4.	51K ohms. If meter indication is normal proceed to step 13.	Check: Resistor R2.
13.	G Pin 3 of power-amplifier Tube V1.	No change in control positions.	Measure resistance at test point G, pin 3 of power-amplifier Tube V1.	24K ohms. If meter indication is normal check: Capacitors C14 (open), C26 (open).	Check: Capacitor C14 (shorted).

TRANSMITTER TROUBLE SHOOTING CHART (cont)					
Step	Test Points	Control Positions	Check Procedure	Normal Indication	Possible Cause of Abnormal Indication
14.	4 Pin 7 of Connector J7.	No change in control positions.	Measure voltage at test point 4, pin 7 of Connector J7.	+510 volts, dc. If meter indication is normal check: Wiring.	Check: Connector J7.
15.	5 MOD Jack J3.	Controls set for voice operation. Depress microphone button.	Measure modulated and unmodulated current at test point 5, MOD Jack J3.	R-f Indicator E2 lights. 70-75 ma with no modulation. 80-90 ma with modulation. If these indications are normal the transmitter is operative.	Check: Switch S4. MIC Jack J4. Microphone button. Transformer T2. If none of these elements is defective proceed to step 16.
16.	H Pin 3 of modulator Tube V2.	No change in control positions. Depress microphone button.	Measure voltage at test point H, pin 3 of modulator Tube V2.	+490 volts, dc. If meter indication is normal proceed to step 17.	If meter indication is abnormal proceed to step 18.
17.	I Pin 3 of modulator Tube V3.	No change in control positions. Depress microphone button.	Measure voltage at test point I, pin 3 of modulator Tube V3.	+490 volts, dc. If meter indication is normal proceed to step 19.	Check: Transformer T2.
18.	J Pin 2 of modulator Transformer T2.	No change in control positions. Depress microphone button.	Measure voltage at test point J, pin 2 of modulation Transformer T2.	+510 volts, dc. If meter indication is normal check: Transformer T2.	Check: Resistors R6, R7, R8, R9.
19.	K Junction of bleeder Resistors R6 and R7.	No change in control positions. Depress microphone button.	Measure voltage at test point K, junction of bleeder Resistors R6 and R7.	+22 volts, dc. If meter indication is normal proceed to step 20.	Check: Resistors R6, R7, R8, R9. Capacitors C15 (shorted), C16 (shorted).
20.		POWER switch to "OFF".	Measure resistance of secondary winding of microphone Transformer T1.	2500 ohms. If meter indication is normal proceed to step 21.	Check: Transformer T1.
21.	L Pin 2 of microphone Transformer T1.	No change in control positions. Remove microphone cable from MIC Jack.	Measure resistance at test point L, pin 2 of microphone Transformer T1.	900 ohms. If meter indication is normal check: Capacitors C15 (open), C16 (open).	Check: Transformer T1. Resistors R5, R6.
22.	10 Pin 2 of Connector J8.	No change in control positions.	Measure voltage at test point 10, pin 2 of Connector J8.	+5.9 volts dc (d-c power source used) 6.2 volts ac (a-c power source used) If meter indication is normal check: Wiring.	Check: Power unit. Cable TFS-2.

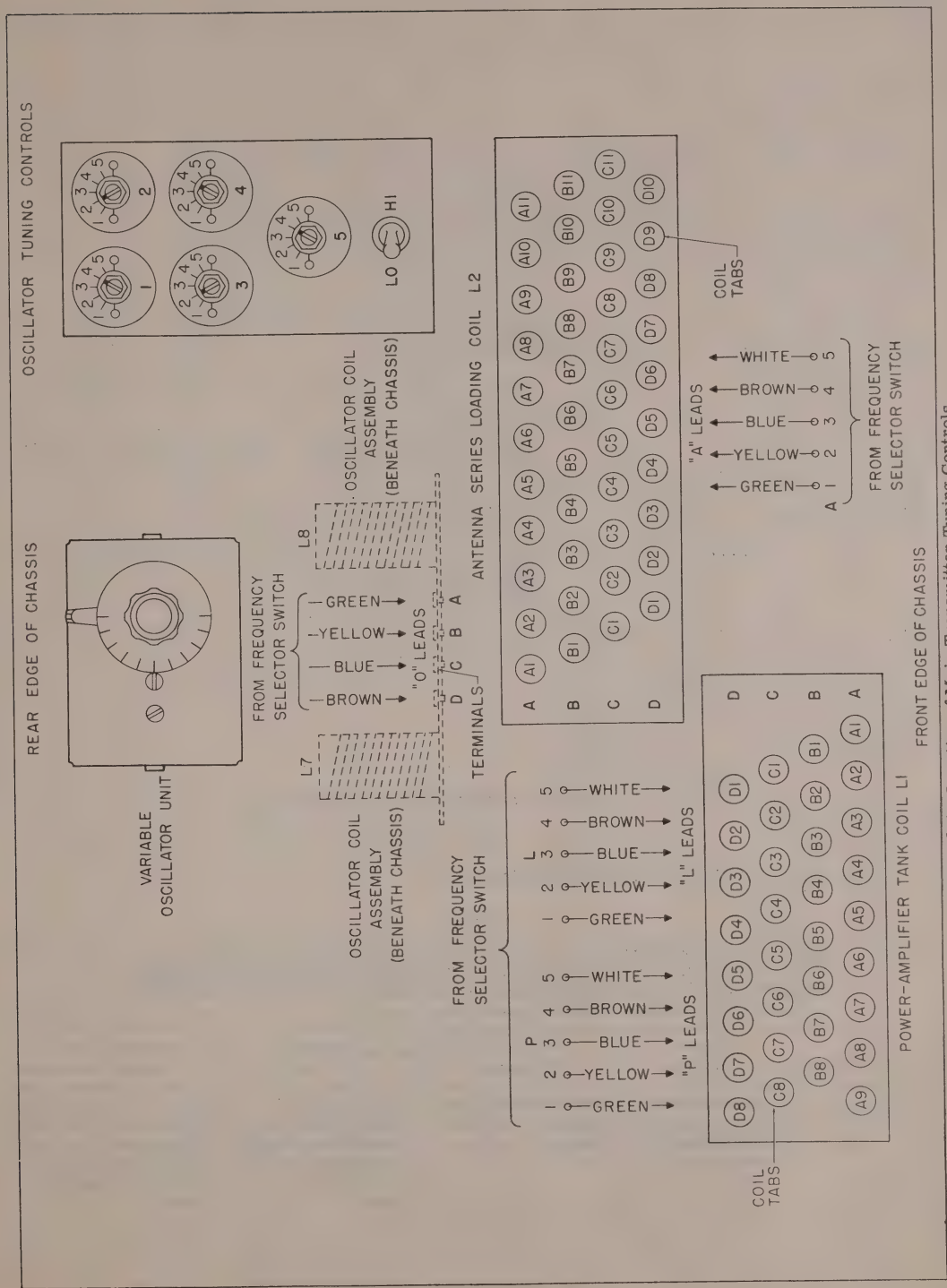

Figure 6-1. Location of Main Transmitter Tuning Controls

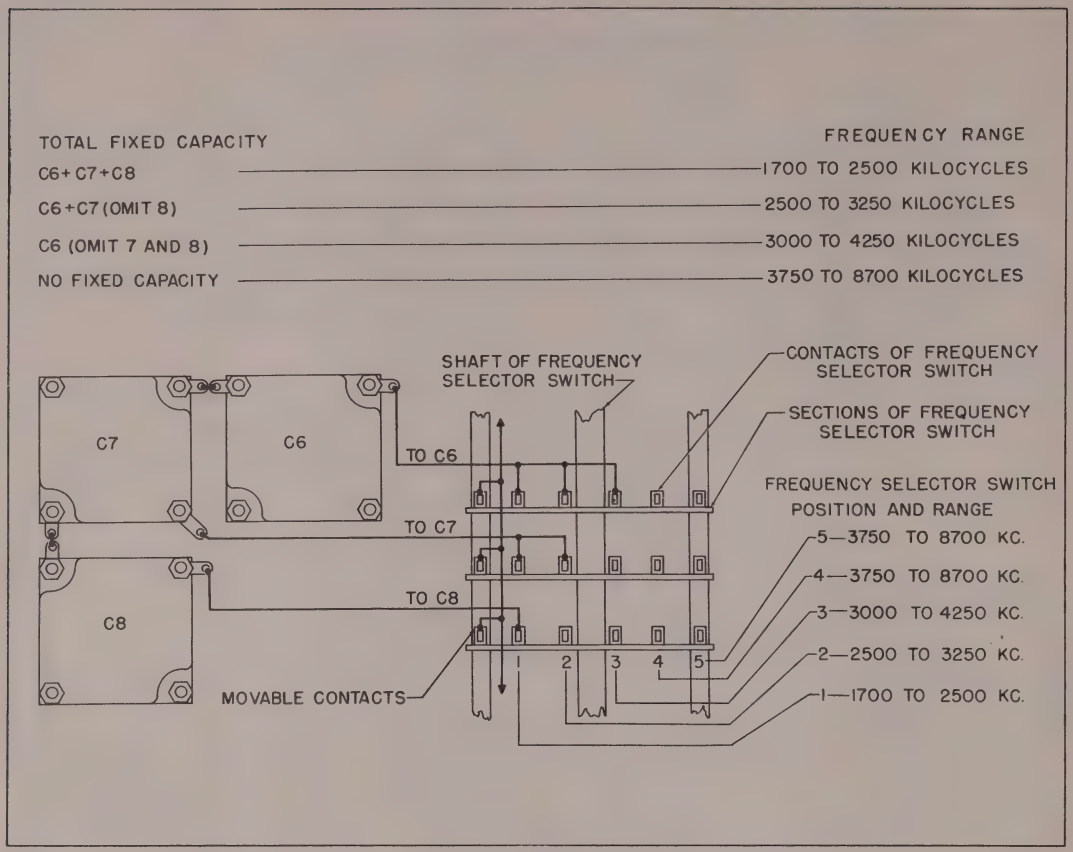

Figure 6-2. Transmitter Padder Capacitor Wiring Diagram

6-11. RECEIVER TROUBLE SHOOTING CHART.

NOTE

If the receiver is being tested in the absence of the transmitter, place a jumper between pins 1 and 2 of J103. Test points are labeled on the transmitter schematic diagram (figure 7-1) and the receiver schematic diagram (figure 7-2). See figures 5-1 and 5-3 for physical location of parts.

Step	Test Points	Control Positions	Check Procedure	Normal Indication	Possible Cause of Abnormal Indication
1.		Turn VOLUME control to extreme clockwise position.	Observe Pilot Light E101 and tube filaments.	Pilot Light E101 lights. Tube filaments heat. If these indications are normal proceed to step 2.	Check: Switch S102. Connector J105. Pilot Light E101. If none of these elements is defective proceed to step 16.

RECEIVER TROUBLE SHOOTING CHART (cont)					
Step	Test Points	Control Positions	Check Procedure	Normal Indication	Possible Cause of Abnormal Indication
2.		R.F. GAIN control to extreme clockwise position. Q ON-OFF switch to "OFF". B.F.O. ON-OFF switch to "OFF". Rotate FREQUENCY selector switch to each channel.	Couple a modulated signal source through a 50 uuf capacitor to test point 9, antenna binding post on chassis. Insure that the frequency of this source agrees with the frequency of the receiver as selected by the FREQUENCY selector switch. NOTE Keep the output of the signal source at a minimum in order to prevent distortion due to overloading of the receiver.	Undistorted signal and background noise heard in speaker on all channels. If these indications are normal proceed to step 3.	If no channels are operative proceed to step 4. If some channels are operative check: Appropriate crystal. (See paragraph 5-19.) Oscillator-mixer Tube V102. Switch S101. Tuning adjustment (Capacitor C151) of high frequency oscillator (if channel 5 is inoperative). If receiver sensitivity is low see step 8, paragraph 6-4.
3.	9 Antenna binding post on chassis.	B.F.O. ON-OFF switch to "ON".	Couple an unmodulated signal source through a 50 uuf capacitor to test point 9, antenna binding post on chassis.	Undistorted signal and background noise heard in speaker on all channels. If these indications are normal the receiver is operative.	Check: Circuits of bfo Tube V108.
4.		Insert headphones cable in PHONE Jack.	None.	Undistorted signal and background noise heard in headphones. If this indication is normal check: Transformer T104. Speaker. Jack J102.	Check: Switch S101. High frequency oscillator circuit of Tube V102. If none of these elements is defective proceed to step 5.
5.	M Jack J101.	No change in control positions.	Measure current at test point M, Jack J101.	3-4.5 ma. If this indication is normal proceed to step 6.	If meter indication is high proceed to step 8. If meter indication is low or zero proceed to step 14.
6.	N Pin 5 of second audio amplifier Tube V107.	No change in control positions.	Remove the modulated signal source from antenna. Couple audio signal source through a 0.1 uf capacitor to test point N, pin 5 of second audio amplifier Tube V107.	Undistorted signal heard in headphones. If this indication is normal proceed to step 7.	Check: Circuits of Tube V107.
7.	6 Pin 2 of first audio amplifier Tube V106.	No change in control positions.	Couple audio signal source through a 0.1 uf capacitor to test point 6, pin 2 of first audio amplifier Tube V106.	Undistorted signal heard in headphones. If this indication is normal check: Capacitor C116 (open).	Check: Circuits of Tube V106.

RECEIVER TROUBLE SHOOTING CHART (cont)					
NOTE Before proceeding with steps 8 through 10 remove oscillator-mixer Tube V102 from its socket.					
Step	Test Points	Control Positions	Check Procedure	Normal Indication	Possible Cause of Abnormal Indication
8.	O Pin 4 of second detector Tube V105.	No change in control positions.	Remove the modulated signal source from antenna. Couple a modulated 525 kc signal source through a 50 uuf capacitor to test point O, pin 4 of second detector Tube V105.	Undistorted signal heard in headphones. If this indication is normal proceed to step 9.	Check: Circuits of Tube V105.
9.	P Pin 4 of second i-f amplifier Tube V104.	No change in control positions.	Remove the modulated signal source from Tube V105 and couple it to test point P, pin 4 of second i-f amplifier Tube V104.	Undistorted signal heard in headphones. If this indication is normal proceed to step 10.	Check: Circuits of Tube V104.
10.	7 Pin 4 of first i-f amplifier Tube V103.	No change in control positions.	Remove the modulated signal source from Tube V104 and couple it to test point 7, pin 4 of first i-f amplifier Tube V103.	Undistorted signal heard in headphones. If this indication is normal proceed to step 11.	Check: Circuits of Tube V103.
11.	8 Pin 2 of Connector J105.	No change in control positions.	Measure voltage at test point 8, pin 2 of Connector J105.	+210 volts, dc. If this indication is normal proceed to step 12.	Check: Connector J105. Power unit.
12.	S Junction of bleeder Resistors R121 and R122.	No change in control positions.	Measure voltage at test point S, junction of bleeder Resistors R121 and R122.	+90 volts, dc. If this indication is normal check: Circuits of Tube V103.	Check: Resistors R119, R120, R121, R122.
13.	11 Pin 1 of Connector J105.	No change in control positions.	Measure voltage at test point 11, pin 1 of Connector J105.	+5.9 volts, dc (d-c power source used) 6.2 volts, ac (a-c power source used) If this indication is normal check: Wiring.	Check: Power unit. Cable PRS-6.

6-12. TRANSMITTER VOLTAGE AND RESISTANCE CHART. The voltage and resistance readings are to be taken under the following conditions:

a. A 6 volt, d-c, power unit or a 110 volt, a-c, power unit used as the source of power unless specifically noted otherwise.

b. The transmitter tuned up and loaded properly with a dummy antenna to prevent radiation.

c. Normal phone operation for voltage measurements unless otherwise noted.

d. No audio signal input.

e. All interconnecting cables disconnected for resistance measurements.

f. The voltage measurements made with a meter of at least 1000 ohms per volt sensitivity.

g. All measurements subject to ±10% variation.

h. All measurements with respect to ground.

TUBE	PIN	VOLTAGE	RESISTANCE
V1 (power-amplifier)	1	6.2 volts, ac (a-c power source used) +5.9 volts, dc (d-c power source used)	0.3 ohms
	2	+320 volts, dc	40.5 K
	3	Do not measure	24 K
	4	+19 volts, dc	200 ohms
	5	Do not measure	0 ohms
	Cap	+550 volts, dc	20.5 K
		CAUTION Before taking this reading, switch PHONE-C.W. switch to "C.W." and REC.-SEND switch to "SEND".	
V2 (modulator)	1	Do not measure	0 ohms
	2	Do not measure	0 ohms
	3	+490 volts, dc	21.75 K
	4	+290 volts, dc	15.5 K
	5	Do not measure	1,250 ohms
	6	Do not measure	Do not measure
	7	6.2 volts, ac (a-c power source used) +5.9 volts, dc (d-c power source used)	0.3 ohms
	8	+22 volts, dc	500 ohms
V3 (modulator)	1	Do not measure	0 ohms
	2	6.2 volts, ac (a-c power source used) +5.9 volts, dc (d-c power source used)	0.3 ohms
	3	+490 volts, dc	21.75 K
	4	+290 volts, dc	15.5 K
	5	Do not measure	1,250 ohms
	6	Do not measure	Do not measure
	7	Do not measure	0 ohms
	8	+22 volts, dc	500 ohms
V4 (oscillator)	1	Do not measure	0 ohms
	2	6.2 volts, ac (a-c power source used) +5.9 volts, dc (d-c power source used)	0.3 ohms

TUBE	PIN	VOLTAGE	RESISTANCE
V4 (cont) (oscillator)	3	+325 volts, dc CAUTION Before taking this reading change PHONE-C.W. switch to "C.W." and REC.-SEND switch to "SEND".	15.5 K
	4	+180 volts, dc	66.5 K
	5	Do not measure	51 K
	6	Do not measure	Do not measure
	7	Do not measure	0 ohms
	8	Do not measure	26 ohms

6-13. RECEIVER VOLTAGE AND RESISTANCE CHART. The voltage and resistance readings are to be taken under the following conditions:

a. A 6 volt, d-c, power unit or a 110 volt, a-c, power unit used as the source of power unless specifically noted otherwise.

b. No signal input.

c. R.F. GAIN control set to maximum clockwise position.

d. B.F.O. switch to "OFF" unless otherwise noted.

e. Q switch to "OFF" unless otherwise noted.

f. All interconnecting cables disconnected for resistance measurements.

g. The voltage measurements made with a meter of at least 10 megohms input resistance.

h. All measurements subject to ±15% variation.

i. All measurements with respect to ground.

TUBE	PIN	VOLTAGE	RESISTANCE
V101 (r-f amplifier)	1	Do not measure	0 ohms
	2	6.2 volts, ac (a-c power source used) +5.9 volts, dc (d-c power source used)	0.65 ohms
	3	+5 to +30 volts, dc (depends on R.F. GAIN control setting)	400 to 9500 ohms (depends on R.F. GAIN control setting)
	4	Do not measure	1.45 meg (On channel 1, 2, and 3) 1.25 meg (On channel 4 or 5)
	5	Same as pin 3	Same as pin 3
	6	+90 volts, dc	19.3 K
	7	Do not measure	0 ohms
	8	+160 volts, dc	28.7 K (On channels 1, 2, 3, and 4) 74.7 K (On channel 5)
V102 (oscillator-mixer)	1	Do not measure	0 ohms
	2	6.2 volts, ac (a-c power source used) +5.9 volts, dc (d-c power source used)	0.65 ohms

TUBE	PIN	VOLTAGE	RESISTANCE
V102 (cont) (oscillator-mixer)	3	+205 volts, dc	23.7 K
	4	+90 volts, dc	19.3 K
	5	-12 volts, dc	51.4 K
	6	+90 volts, dc	19.3 K
	7	Do not measure	0 ohms
	8	+3.5 volts, dc	400 ohms
	Cap	Do not measure	1.45 meg (On channel 1, 2, and 3) 1.25 meg (On channel 4 or 5)
V103 (1st i-f amplifier)	1	Do not measure	0 ohms
	2	Do not measure	0 ohms
	3	+6 volts, dc	1 K
	4	Do not measure	700 K
	5	+6 volts, dc	1 K
	6	+90 volts, dc	19.3 K
	7	6.2 volts, ac (a-c power source used) +5.9 volts, dc (d-c power source used)	0.65 ohms
	8	+195 volts, dc	25.7 K
V104 (2nd i-f amplifier)	1	Do not measure	0 ohms
	2	Do not measure	0 ohms
	3	+5 to +19 volts, dc (Depends on I.F. GAIN screwdriver adjustment)	600 to 10,000 ohms (Depends on I.F. GAIN screwdriver adjustment)
	4	Do not measure	775 K
	5	Same as pin 3	Same as pin 3
	6	+90 volts, dc	19.3 K
	7	6.2 volts, ac (a-c power source used) +5.9 volts, dc (d-c power source used)	0.65 ohms
	8	+195 volts, dc	25.7 K
V105 (2nd detector-squelch)	1	Do not measure	0 ohms
	2	Do not measure	0 to 200 K (Depends on I.F. GAIN screwdriver adjustment)

TUBE	PIN	VOLTAGE	RESISTANCE
V105 (cont) (2nd detector-squelch)	3	Do not measure	0 ohms
	4	Do not measure	251 K
	5	Do not measure	251 K
	6	+11 volts, dc (Q switch to "ON") 0 volts (Q switch to "OFF")	515 K (Q switch to "ON") 510 K (Q switch to "OFF")
	7	6.2 volts, ac (a-c power source used) +5.9 volts, dc (d-c power source used)	0.65 ohms
	8	Do not measure	0 ohms
V106 (1st audio amplifier)	1	Do not measure	0 ohms
	2	+11 volts, dc (Q switch to "ON") 0 volts (Q switch to "OFF")	1.01 meg (Q switch to "ON") 1 meg (Q switch to "OFF")
	3	+1.5 volts, dc (Q switch to "OFF") +20 volts, dc (Q switch to "ON")	600 ohms (Q switch to "OFF") 9,250 ohms (Q switch to "ON")
	4	No connection	
	5	No connection	
	6	+135 volts, dc (Q switch to "OFF") +195 volts, dc (Q switch to "ON")	504 K (Q switch to "OFF") 506 K (Q switch to "ON")
	7	6.2 volts, ac (a-c power source used) +5.9 volts, dc (d-c power source used)	0.65 ohms
	8	0 volts	0 ohms
V107 (2nd audio amplifier)	1	Do not measure	0 ohms
	2	6.2 volts, ac (a-c power source used) +5.9 volts, dc (d-c power source used)	0.65 ohms
	3	+200 volts, dc	24.1 K
	4	+210 volts, dc	23.7 K
	5	Do not measure	500 K
	6	No connection	
	7	Do not measure	0 ohms
	8	+13 volts, dc	600 ohms

TUBE	PIN	VOLTAGE	RESISTANCE
V108 (beat frequency oscillator)	1	Do not measure	0 ohms
	2	6.2 volts, ac (a-c power source used)	0.65 ohms
		+5.9 volts, dc (d-c power source used)	
	3	+210 volts, dc (B.F.O. switch to "ON")	43.7 K
	4	Do not measure	100 K
	5	Do not measure	4.8 ohms
	6	Same as pin 3	43.7 K
	7	Do not measure	0 ohms
	8	Same as pin 3	43.7 K

6-14. ALIGNMENT AND ADJUSTMENTS.

6-15. TRANSMITTER TUNING AND ADJUSTMENTS.

6-16. GENERAL. Operating frequencies are assigned with respect to the FREQUENCY selector switch positions. The frequencies of the first four channels are determined by specified crystals. For operating frequencies between 1.7 and 8.0 megacycles, the crystal frequency is the same as the operating frequency. For operating frequencies between 8.0 and 8.7 megacycles, the crystal frequency is one-half the operating frequency. The frequency of channel five is determined by the setting of the variable oscillator frequency control unit.

6-17. The frequency range for each position of the FREQUENCY selector switch is normally pre-assigned as follows:

FREQUENCY Selector Switch Position	Frequency Range mc
1	1.7 to 3.0
2	2.75 to 4.0
3	4.0 to 6.0 & 8.0 to 8.7
4	6.0 to 8.0
5	4.0 to 7.0

6-18. The frequency range of any one position of the FREQUENCY selector switch is determined by (1) the appropriate "O" lead connection to a terminal of coil L7 or L8, (2) the appropriate "P" lead connection to a tab of coil L1, and (3) the connection of the power-amplifier tank circuit padders.

6-19. If it is necessary to change the pre-assigned frequency ranges for the channels or to incorporate more than one frequency range in a given channel, a modification of the "O" lead and power-amplifier tank circuit padder wiring is necessary. Refer to figures 6-1 and 7-1 when modifying the "O" lead wiring to the terminal board and to figures 6-2 and 7-1 when modifying the padder wiring to the contacts of the FREQUENCY selector switch.

6-20. The leads of the FREQUENCY selector switch are color-coded to aid the technician during modification of the circuit wiring. Refer to paragraph 4-24 for the color-code.

6-21. TUNING, CRYSTAL CONTROL. To tune the oscillator and power-amplifier circuits for crystal operation (channels 1, 2, 3, and 4), proceed as follows, referring to the tuning chart (paragraph 6-22) whenever necessary: (See figure 6-1.)

a. Set the FREQUENCY selector switch to the desired frequency.

b. Disconnect the appropriate "L" and "A" leads of the FREQUENCY selector switch from their tabs on coils L1 and L2 respectively.

c. Connect the appropriate "P" lead of the FREQUENCY selector switch to the proper tab on coil L1.

d. Connect the appropriate padder capacitors (C6, C7, and C8) to the FREQUENCY selector switch. (See paragraph 4-23 and figure 6-2.)

e. Connect the appropriate "O" lead of the FREQUENCY selector switch to the proper terminal (A, B, C, or D) of coil L7 or L8.

f. Set the appropriate oscillator tank tuning capacitor to its approximate positions.

g. Insert microphone plug in MIC jack.

h. Insert test milliameter (0 - 10 ma) in GRID jack.

i. Insert test milliameter (0 - 200 ma) in AMP jack.

j. Place operating controls in the following positions:

POWER switch to "ON".
PHONE-C.W. switch to "PHONE".
T-O switch to "T" (Tune).

k. After one minute press button switch on microphone.

l. GRID meter should indicate 1/2 - 3 ma. AMP meter should indicate 25 - 30 ma.

m. Adjust the appropriate power-amplifier tuning control for a minimum reading (dip point) on AMP meter.

n. Place T-O switch to the "O" position and press microphone button switch.

o. GRID test meter should indicate 2 - 5 ma. AMP test meter should indicate 35 - 40 ma.

p. Readjust the tuning controls, if necessary, to obtain the meter indications of step o. (See the NOTE of paragraph 5-21 for proper adjustment of the grid current to insure fast starting of the oscillator.)

6-22. TUNING CHART FOR CRYSTAL OPERATION (Channels 1, 2, 3, and 4).

NOTE

When using this chart refer to figure 6-1 for location of appropriate coil tabs, terminals, and tuning controls.

Operating Frequency (kc)	Crystal Frequency	"O" Lead on Osc Coil Terminal	Osc Tank Tuning Control Position (approximate)	"P" Lead on Power-Amplifier Coil L1 Tab	Power-Amplifier Padder Capacitors
1,700	1,700	A	1.0	A9	C6, C7, C8
2,000	2,000	A	2.5	A7	C6, C7, C8
2,500	2,500	A	4.5	A5	C6, C7, C8
2,500	2,500	A	4.5	B6	C6, C7
2,750	2,750	A	5.0	C5	C6, C7
3,000	3,000	A	6.0	D4	C6, C7
2,750	2,750	B	1.0	C5	C6, C7
3,000	3,000	B	2.0	D4	C6, C7
3,250	3,250	B	3.5	B4	C6, C7
3,000	3,000	B	2.0	D6	C6
3,250	3,250	B	3.5	A6	C6
3,500	3,500	B	4.0	B5	C6
3,750	3,750	B	5.0	A5	C6
4,000	4,000	B	5.5	C4	C6
4,250	4,250	B	5.5	B4	C6
3,750	3,750	B	5.0	C8	None
4,000	4,000	B	5.5	C7	None
4,000	4,000	C	1.5	C7	None
4,250	4,250	C	2.0	D6	None
4,500	4,500	C	2.5	B6	None
4,750	4,750	C	3.0	D5	None
5,000	5,000	C	3.5	C5	None
5,250	5,250	C	4.0	B5	None
5,500	5,500	C	4.5	A5	None
5,750	5,750	C	5.0	C4	None
6,000	6,000	C	5.0	B4	None
6,000	6,000	D	1.0	B4	None
6,500	6,500	D	2.5	C4	None

TUNING CHART FOR CRYSTAL OPERATION (Channels 1, 2, 3, and 4) (cont)					
Operating Frequency (kc)	Crystal Frequency	"O" Lead on Osc Coil Terminal	Osc Tank Tuning Control Position (approximate)	"P" Lead on Power-Amplifier Coil L1 Tab	Power-Amplifier Padder Capacitors
7,000	7,000	D	3.0	A4	None
7,500	7,500	D	3.5	D3	None
8,000	8,000	D	4.0	D3	None
8,000	4,000	C	1.5	D3	None
8,500	4,250	C	2.0	D3	None
9,000	4,500	C	2.5	C3	None

6-23. ANTENNA LOADING CIRCUIT. To adjust the antenna loading circuit proceed as follows: (See figures 4-6 and 6-1.)

a. Connect the appropriate "L" lead of the FREQUENCY selector switch to tab A1 or B1 on coil L1 for light loading.

b. Connect the "A" lead of the FREQUENCY selector switch to coil L2. Adjust this connection for maximum indication on AMP jack test meter.

c. Retune the power-amplifier tuning control for a dip on AMP jack test meter.

d. Repeat steps 1 to 3 until the power-amplifier is loaded to rated power output, which corresponds to an AMP jack test meter indication of 85 - 100 ma.

e. These settings can only be determined by a trial and error method.

WARNING

Do not adjust the coil tab while the transmitter is in operation.

6-24. TUNING, VARIABLE FREQUENCY CONTROL. To tune the oscillator and power-amplifier circuits for variable frequency operation (channel 5) proceed as follows, referring to the tuning chart (paragraph 6-25) whenever necessary: (See figure 6-1.)

a. Determine (1) the variable oscillator frequency control unit setting, (2) the position of the HI-LO switch, (3) the setting of the No. 5 oscillator tuning control (capacitor C25), and (4) the location of the No. 5 "P" lead on coil L1.

b. Disconnect the No. 5 "L" and "A" leads to coils L1 and L2.

c. Place the operating controls in the following positions:

POWER switch to "ON".
FREQUENCY selector switch to position "5".
PHONE-C.W. switch to "PHONE".
T-O switch to "T" (Tune).

d. Connect microphone plug to MIC jack.

e. Connect a test meter (0 - 10 ma) to GRID jack.

f. Connect a test meter (0 - 200 ma) to AMP jack.

g. After one minute press the microphone button switch.

h. Adjust the variable frequency oscillator control unit to exact operating frequency. A frequency meter, such as Frequency Meter Set SCR-211, is required to perform this adjustment.

i. Adjust the oscillator tank tuning control (capacitor C25) for a 1/2 - 3 ma indication on the GRID meter.

j. Adjust the power-amplifier tuning control (capacitor C5) for minimum indication on AMP meter.

k. Place T-O switch to the "O" position and press microphone button switch.

l. Grid test meter should indicate 2 - 5 ma. AMP test meter should indicate 35 - 40 ma.

m. Readjust the tuning controls, if necessary, to obtain the meter indications of step l. (See the NOTE of paragraph 5-21 for proper adjustment of the grid current to insure fast starting of the oscillator.)

n. To adjust the antenna loading circuit see paragraph 6-23.

6-25. TUNING CHART FOR VARIABLE FREQUENCY OPERATION (Channel 5).

NOTE

When using this chart refer to figure 6-1 for location of appropriate coil tabs and tuning controls.

Operating Frequency (kc)	Oscillator Frequency	Variable Osc Control Unit Position (approximate)	HI-LO Switch Position	Osc Tank Tuning Control Position (approximate)	"P" Lead on Power-Amplifier Coil L1 Tab
4,000	2,000	5	LO	1.8	C7
4,100	2,050	13	LO	2.0	C7

TUNING CHART FOR VARIABLE FREQUENCY OPERATION (Channel 5) (cont)					
Operating Frequency (kc)	Oscillator Frequency	Variable Osc Control Unit Position (approximate)	HI-LO Switch Position	Osc Tank Tuning Control Position (approximate)	"P" Lead on Power-Amplifier Coil L1 Tab
4,200	2,100	20	LO	2.25	D7
4,300	2,150	26	LO	2.5	D7
4,400	2,200	32	LO	2.9	C7
4,500	2,250	38	LO	3.1	B7
4,600	2,300	43	LO	3.3	D6
4,700	2,350	48	LO	3.5	C6
4,800	2,400	53	LO	3.7	A6
4,900	2,450	57	LO	3.9	A6
5,000	2,500	61	LO	4.0	D5
5,100	2,550	65	LO	4.1	D5
5,200	2,600	69	LO	4.2	C5
5,300	2,650	72	LO	4.3	C5
5,400	2,700	75	LO	4.5	C5
5,500	2,750	78	LO	4.7	C5
5,600	2,800	81	LO	4.8	A5
5,700	2,850	84	LO	5.0	A5
5,800	2,900	87	LO	5.0	A5
5,900	2,950	89	LO	5.1	C4
6,000	3,000	92	LO	5.2	C4
6,000	2,000	5	HI	4.5	C4
6,100	2,033	10	HI	4.5	C4
6,200	2,066	15	HI	4.6	C4
6,300	2,100	20	HI	4.7	B4
6,400	2,133	24	HI	4.9	B4
6,500	2,166	28	HI	5.0	B4
6,600	2,200	32	HI	5.1	B4
6,700	2,233	36	HI	5.2	B4
6,800	2,266	40	HI	5.3	D3
6,900	2,300	43	HI	5.4	D3
7,000	2,333	47	HI	5.5	D3

6-26. TUNING, CRYSTAL CONTROL (Channel 5). Crystal control may be used in FREQUENCY selector switch position "5". The frequency range available is 4.0 to 6.0 megacycles. To tune the oscillator and power-amplifier circuits proceed as follows:

a. Plug crystal into socket X2, using contacts No. 2 and 5.

b. Disconnect the No. 5 "L" and "A" leads to coils L1 and L2.

c. Set HI-LO switch to "LO" for operation between 4.0 and 5.0 mc and to "HI" for operation between 5.0 and 6.0 mc.

d. Determine No. 5 "P" lead tab on coil L1 from paragraph 6-25.

e. Set the No. 5 power-amplifier tank tuning control to approximately one-half maximum capacity.

f. Set the No. 5 oscillator tank tuning control to the maximum clockwise position.

g. To complete the tuning follow the procedure as outlined in paragraph 6-24.

6-27. RECEIVER TUNING AND ADJUSTMENTS.

6-28. GENERAL. The frequency range for each position of the FREQUENCY selector switch is normally pre-assigned as follows:

FREQUENCY Selector Switch Position	Frequency Range (kc)
1	1,700 to 2,765
2	2,765 to 4,750
3	2,765 to 4,750
4	4,750 to 8,700
5	190 to 510

6-29. The frequency range of any one of the four crystal controlled channels is determined by the connections to r-f input coils L102, L103, and L104, and by the connections to r-f output coils L106, L107, and L108. The frequency coverage from 1.7 to 8,7 mc is in three ranges as follows:

Frequency Range (kc)	Input Coil	Output Coil
1,700 to 2,765	L102	L106
2,765 to 4,750	L103	L107
4,750 to 8,700	L104	L108

If it is necessary to change the pre-assigned frequency ranges for the channels or to incorporate more than one frequency range in a given channel, a modification of the coil circuit wiring to the contacts of the FREQUENCY selector switch is necessary. Refer to figures 6-3 and 7-2 when modifying the coil circuit wiring.

6-30. TUNING, CRYSTAL CONTROL. To tune the receiver for crystal operation (channels 1, 2, 3, and 4) proceed as follows: (See figure 6-4.)

a. Place the operating controls in position as follows:

VOLUME control to midpoint.
R.F. GAIN to extreme clockwise position.
Q control to "OFF".
B.F.O. control to "OFF".
ANT TRIM control to midpoint.

b. Turn FREQUENCY selector switch to desired position.

c. Determine the approximate positions for the appropriate r-f and oscillator-mixer tuning controls.

NOTE

Before using steps d and e for receiver tuning the technician must insure that the i-f transformers have not been misaligned since being pre-set by the factory. If alignment is necessary see paragraph 6-33.

d. Adjust the appropriate oscillator-mixer tuning control (capacitor C146, C147, C148, or C149) for maximum audio output (loudest background noise).

e. Adjust the appropriate r-f tuning control (capacitor C141, C142, C143, or C144) for maximum audio output (loudest background noise).

f. If desirable, an r-f signal generator of known frequency can be used to adjust the rf and oscillator-mixer tuned circuits. For best results connect the generator to the receiver antenna terminal on the chassis and adjust its output to 5 microvolts modulated 30% with a 400 cycle audio tone. Any one of the following methods may then be used for adjusting the r-f and oscillator-mixer tuning controls:

(1) Connect the a-c voltmeter leads across the speaker terminals and tune the controls for maximum meter indication.

(2) Tune the controls for maximum audio output signal.

(3) Tune the controls for minimum indication on a 0 - 15 or 25 ma d-c meter inserted in test jack J101, located on top of the receiver chassis. (See figure 1-7.)

6-31. TUNING, VARIABLE FREQUENCY CONTROL. For the frequency range of 190 to 510 kilocycles (FREQUENCY selector switch position "5") coils L101 and L105 each have two fixed tuning capacitors. The tuning range of the circuit is determined by the connection of these capacitors across the coils as follows:

Frequency Range kc	Capacitors Across L101	Capacitors Across L105
190 to 227	C131, C132	C133, C134
227 to 290	C131	C133
290 to 510	neither capacitor	neither capacitor

6-32. To tune the receiver for variable frequency operation (channel 5) proceed as follows: (See figure 6-4.)

a. Place the operating controls in the proper positions. (See step a, paragraph 6-30.)

b. Connect the receiver to a modulated signal source which is adjusted for the desired frequency.

c. Determine the approximate positions for the oscillator tuning control (capacitor C151) and the channel 5 r-f and oscillator-mixer tuning controls.

d. Adjust the oscillator tuning control for a maximum output (audio or a-c volts) at the speaker or a minimum output (d-c current) at test jack J101.

e. Adjust the oscillator-mixer tuning control (capacitor C150) in the same manner as the oscillator tuning control. (See step d.)

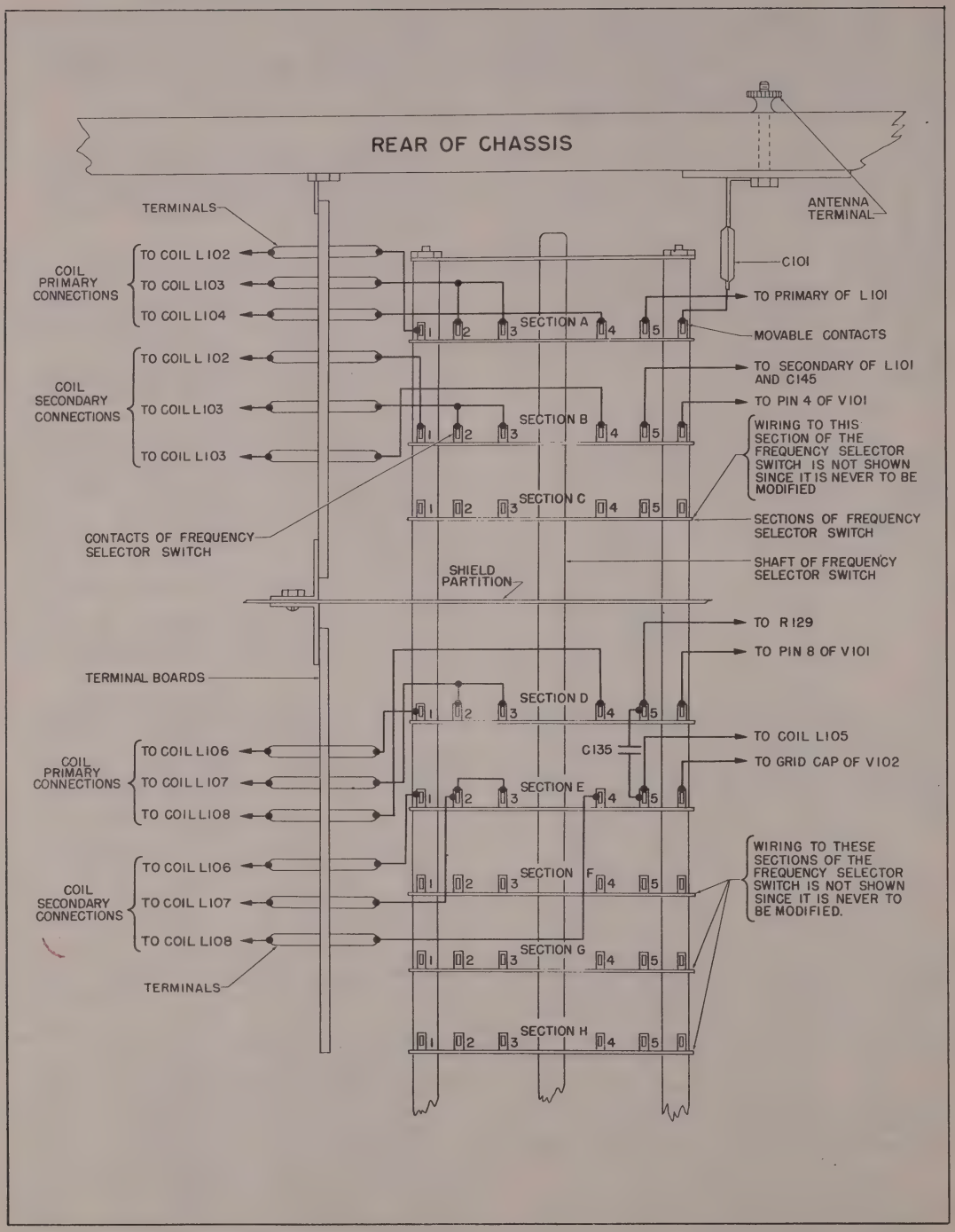

Figure 6-3. Receiver FREQUENCY Selector Switch Wiring Diagram

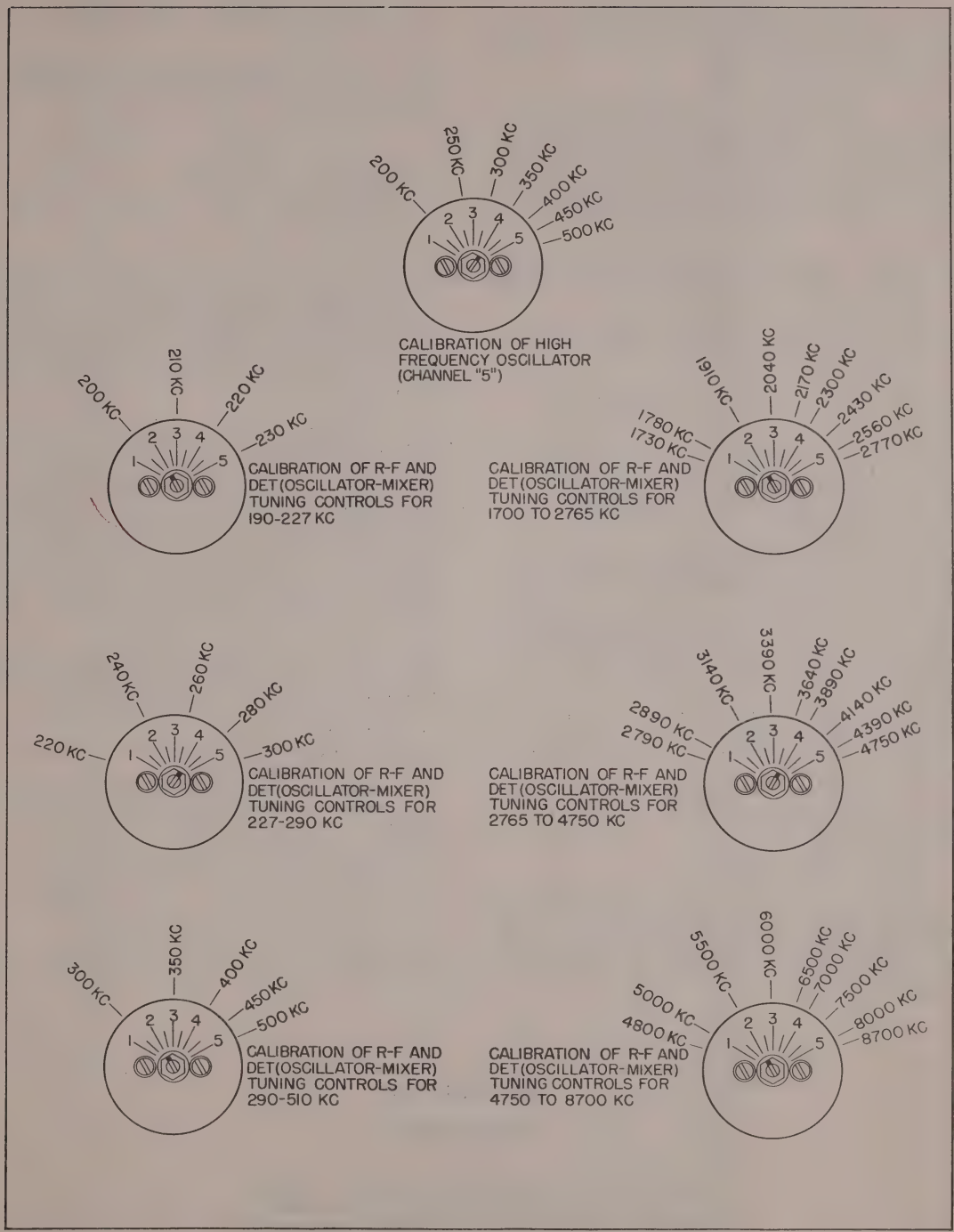

Figure 6-4. Receiver Tuning Control Settings

f. Adjust the r-f tuning control (capacitor C145) in the same manner as the oscillator-mixer tuning control. (See step e.)
g. Repeat steps d, e, and f.

6-33. ALIGNMENT OF I-F AMPLIFIER STAGES. To align the i-f stages, a signal generator and an a-c voltmeter are required. The signal generator must be capable of producing a modulated signal of exactly 525 kilocycles. The a-c voltmeter must have a range of 0 - 1.0 volts. Connect the meter test leads across the speaker terminals.

6-34. To align the i-f stages, proceed as follows:
a. Place the operating controls in position as follows:

VOLUME control to midpoint.
R.F. GAIN control to extreme clockwise position.
Q switch to "OFF".
B.F.O. switch to "OFF".
FREQUENCY selector switch to position "1".

b. Remove crystal Y101.
c. Connect the signal generator through a 50 to 100 uuf mica capacitor to the grid cap of tube V102.
d. Set the signal generator at exactly 525 kc and adjust its output to 100 microvolts modulated 30% with a 400 cycle audio tone.
e. Adjust the tuning controls of i-f transformers T103, T102, and T101 for resonance (maximum output), at which point the output meter should indicate at least 0.45 volts (50 milliwatts).
f. The i-f transformers also can be aligned by inserting a test milliameter (0 - 15 or 25 ma) into test jack J101 and starting with T103, adjusting the tuning controls for a minimum indication on the meter.

6-35. BFO CIRCUIT ADJUSTMENT. To adjust the bfo circuit proceed as follows:
a. Place the operating controls in position as follows:

VOLUME control to midpoint.
R.F. GAIN control to half maximum rotation.
Q control to "OFF".
B.F.O. switch to "ON".
B.F.O. control to midpoint.

b. Connect the signal generator through a 50 to 100 uuf mica capacitor to the grid cap of tube V102; modulation on the generator shall be switched off.
c. Adjust the generator's output for 100 microvolts at exactly 525 kc.
d. Adjust the tuning control of bfo tuning unit L111 for a zero-beat note.

6-36. AUTOMATIC SQUELCH OR Q CIRCUIT ADJUSTMENT. To adjust the automatic squelch or Q circuit proceed as follows:
a. Place the operating controls in position as follows:

VOLUME control to midpoint.
R.F. GAIN control to maximum clockwise rotation.
Q switch to "ON".
B.F.O. switch to "OFF".

b. Insure that the receiver is connected to a normal operating antenna or its equivalent.
c. Turn the "Q" adjustment (variable resistor R136) clockwise until the background noise is heard, then turn it counterclockwise until the receiver just becomes silent. Check the adjustment on several receiving frequencies.

6-37. Turning the "Q" adjustment clockwise will cause the receiver to respond to weaker signals and reduce the quieting action. Turning the adjustment counterclockwise increases the effectiveness of the circuit against high noise levels, but also will require that a stronger signal be received in order to release the circuit. The exact adjustment is a compromise between the local noise level and the strength of the desired signals on all operating frequencies. With proper adjustment, the receiver is automatically silenced until a desired signal releases the squelch circuit.

6-38. SIGNAL-TO-NOISE RATIO MEASUREMENT. When all alignment procedures are completed, check the receiver's signal-to-noise ratio as follows:
a. Place the operating controls in position as per step a, paragraph 6-30.
b. Connect an r-f signal generator to the receiver as per step h, paragraph 6-4.
c. Measure the output voltage on the a-c voltmeter.
d. Switch off the modulation of the generator (leave the carrier frequency on) and measure the output voltage due to background noise alone.
e. Ratio of voltage of step c to voltage of step d is the signal-to-noise ratio and must be greater than 3 to 1.

6-39. LUBRICATION. (See paragraph 5-28.)

6-40. INSPECTION AND CLEANING SCHEDULE. (See paragraph 5-30.)

SECTION VII
DIAGRAMS

The diagrams which follow are those which correctly reflect the subject equipment. All symbols are standard as given in JAN-STD-15 and all values are given where pertinent.

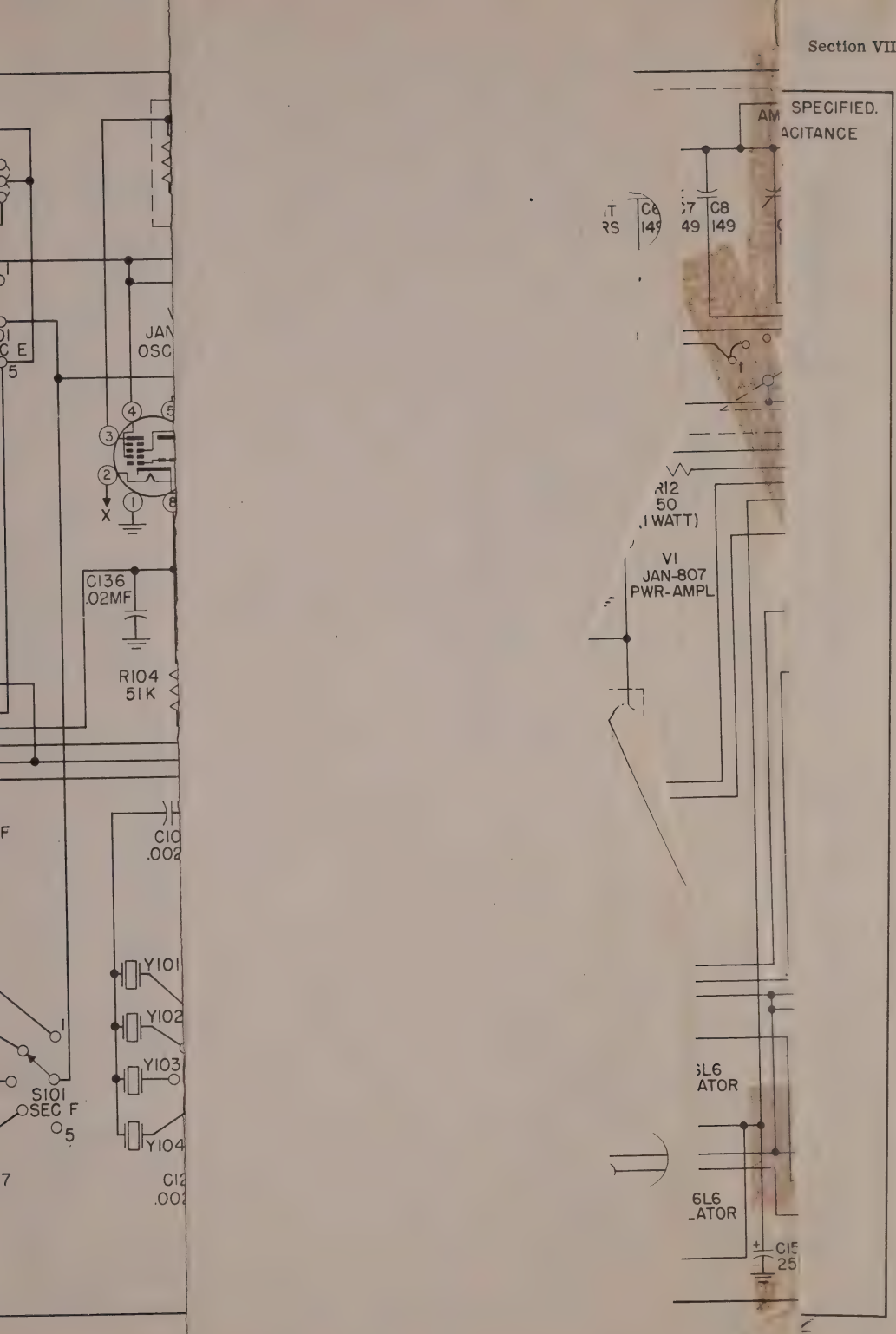

Figure 7-3. 6 Volt D-C Power Distribution Diagram

f. Adjust the r-f tuning control (capacitor C145) in the same manner as the oscillator-mixer tuning control. (See step e.)
g. Repeat steps d, e, and f.

6-33. ALIGNMENT OF I-F AMPLIFIER STAGES. To align the i-f stages, a signal generator and an a-c voltmeter are required. The signal generator must be capable of producing a modulated signal of exactly 525 kilocycles. The a-c voltmeter must have a range of 0 - 1.0 volts. Connect the meter test leads across the speaker terminals.

6-34. To align the i-f stages, proceed as follows:
a. Place the operating controls in position as follows:

VOLUME control to midpoint.
R.F. GAIN control to extreme clockwise position.
Q switch to "OFF".
B.F.O. switch to "OFF".
FREQUENCY selector switch to position "1".

b. Remove crystal Y101.
c. Connect the signal generator through a 50 to 100 uuf mica capacitor to the grid cap of tube V102.
d. Set the signal generator at exactly 525 kc and adjust its output to 100 microvolts modulated 30% with a 400 cycle audio tone.
e. Adjust the tuning controls of i-f transformers T103, T102, and T101 for resonance (maximum output), at which point the output meter should indicate at least 0.45 volts (50 milliwatts).
f. The i-f transformers also can be aligned by inserting a test milliameter (0 - 15 or 25 ma) into test jack J101 and starting with T103, adjusting the tuning controls for a minimum indication on the meter.

6-35. BFO CIRCUIT ADJUSTMENT. To adjust the bfo circuit proceed as follows:
a. Place the operating controls in position as follows:

VOLUME control to midpoint.
R.F. GAIN control to half maximum rotation.
Q control to "OFF".
B.F.O. switch to "ON".
B.F.O. control to midpoint.

b. Connect the signal generator through a 50 to 100 uuf mica capacitor to the grid cap of tube V102; modulation on the generator shall be switched off.
c. Adjust the generator's output for 100 microvolts at exactly 525 kc.
d. Adjust the tuning control of bfo tuning unit L111 for a zero-beat note.

6-36. AUTOMATIC SQUELCH OR Q CIRCUIT ADJUSTMENT. To adjust the automatic squelch or Q circuit proceed as follows:
a. Place the operating controls in position as follows:

VOLUME control to midpoint.
R.F. GAIN control to maximum clockwise rotation.
Q switch to "ON".
B.F.O. switch to "OFF".

b. Insure that the receiver is connected to a normal operating antenna or its equivalent.
c. Turn the "Q" adjustment (variable resistor R136) clockwise until the background noise is heard, then turn it counterclockwise until the receiver just becomes silent. Check the adjustment on several receiving frequencies.

6-37. Turning the "Q" adjustment clockwise will cause the receiver to respond to weaker signals and reduce the quieting action. Turning the adjustment counterclockwise increases the effectiveness of the circuit against high noise levels, but also will require that a stronger signal be received in order to release the circuit. The exact adjustment is a compromise between the local noise level and the strength of the desired signals on all operating frequencies. With proper adjustment, the receiver is automatically silenced until a desired signal releases the squelch circuit.

6-38. SIGNAL-TO-NOISE RATIO MEASUREMENT. When all alignment procedures are completed, check the receiver's signal-to-noise ratio as follows:
a. Place the operating controls in position as per step a, paragraph 6-30.
b. Connect an r-f signal generator to the receiver as per step h, paragraph 6-4.
c. Measure the output voltage on the a-c voltmeter.
d. Switch off the modulation of the generator (leave the carrier frequency on) and measure the output voltage due to background noise alone.
e. Ratio of voltage of step c to voltage of step d is the signal-to-noise ratio and must be greater than 3 to 1.

6-39. LUBRICATION. (See paragraph 5-28.)

6-40. INSPECTION AND CLEANING SCHEDULE. (See paragraph 5-30.)

SECTION VII

DIAGRAMS

The diagrams which follow are those which correctly reflect the subject equipment. All symbols are standard as given in JAN-STD-15 and all values are given where pertinent.

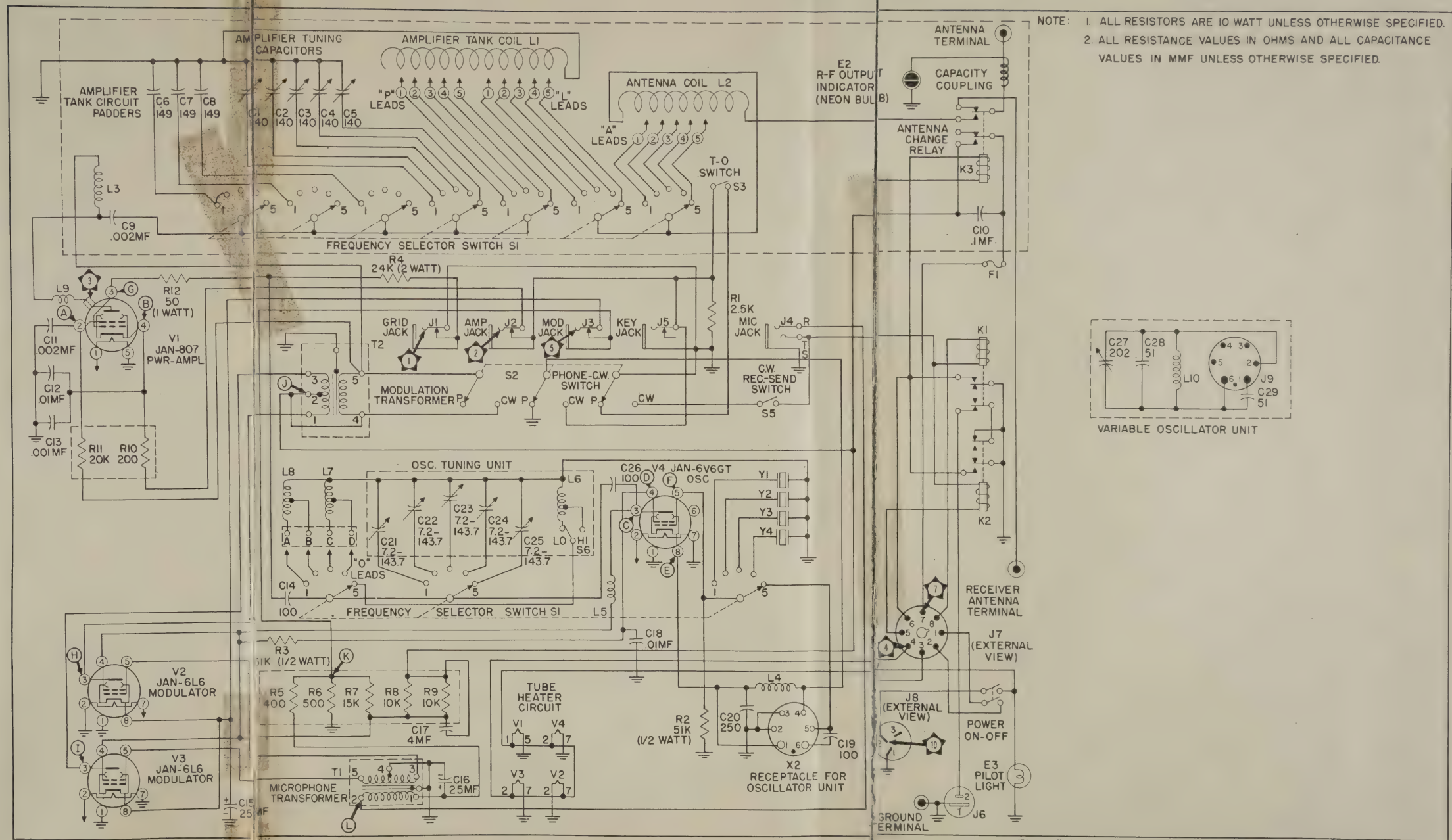

Figure 7-1. Transmitter Schematic Diagram T-91/VRC-4

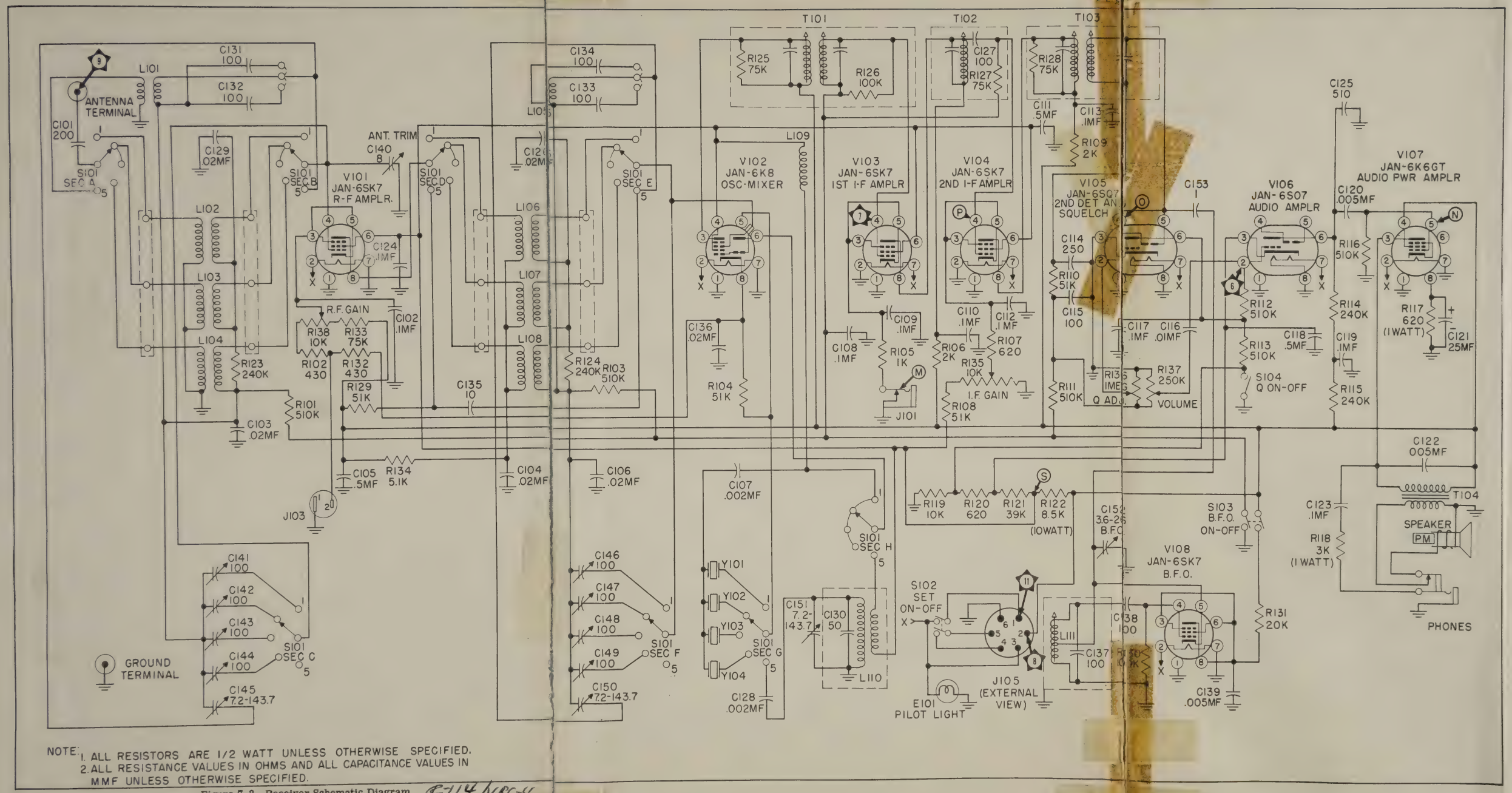

Figure 7-2. Receiver Schematic Diagram R-714/NRC-4

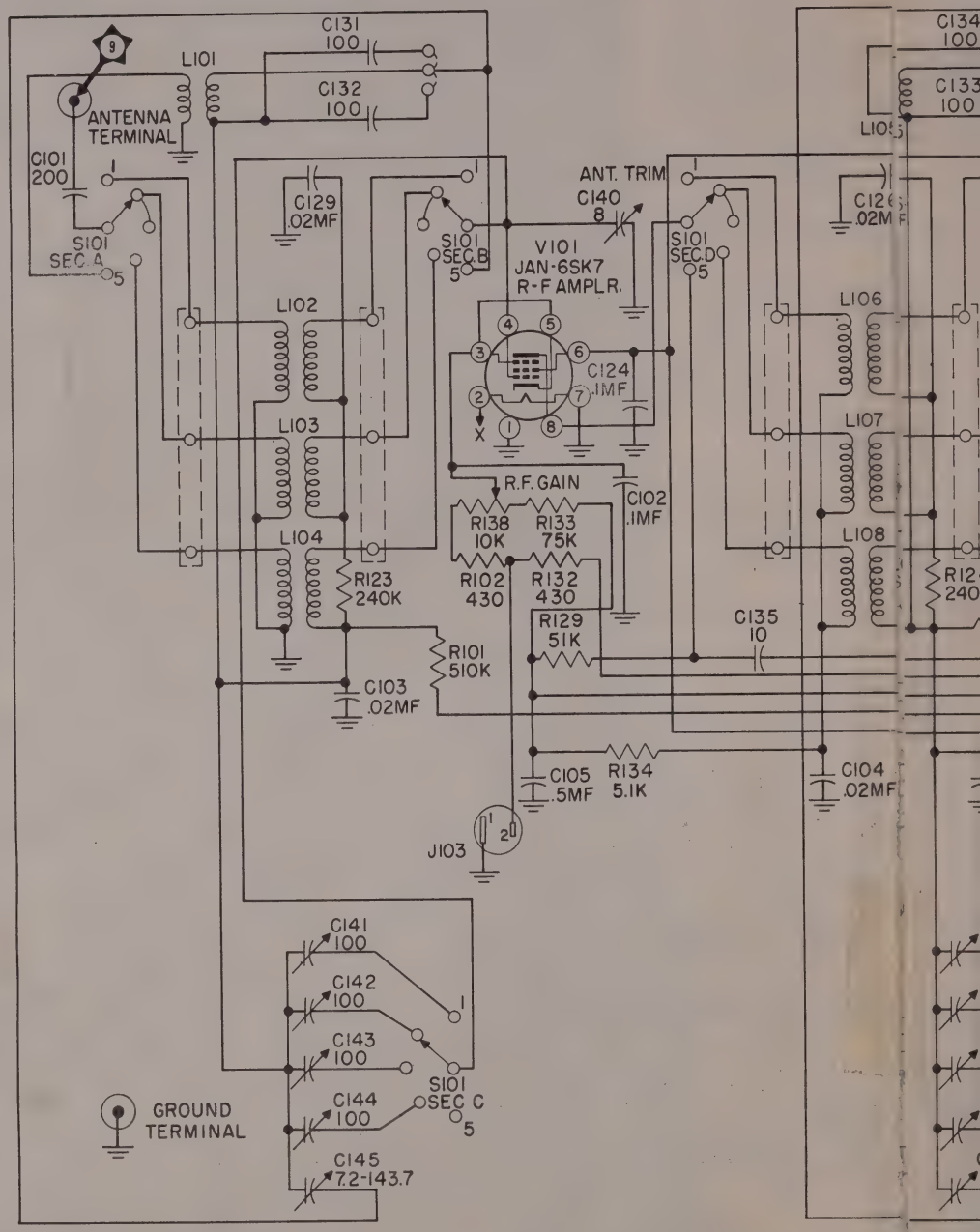

NOTE: 1. ALL RESISTORS ARE 1/2 WATT UNLESS OTHERWISE SPECIFIED.
2. ALL RESISTANCE VALUES IN OHMS AND ALL CAPACITANCE VALUES IN MMF UNLESS OTHERWISE SPECIFIED.

Figure 7-2. Receiver Schematic Diagram R-714/VRC-4

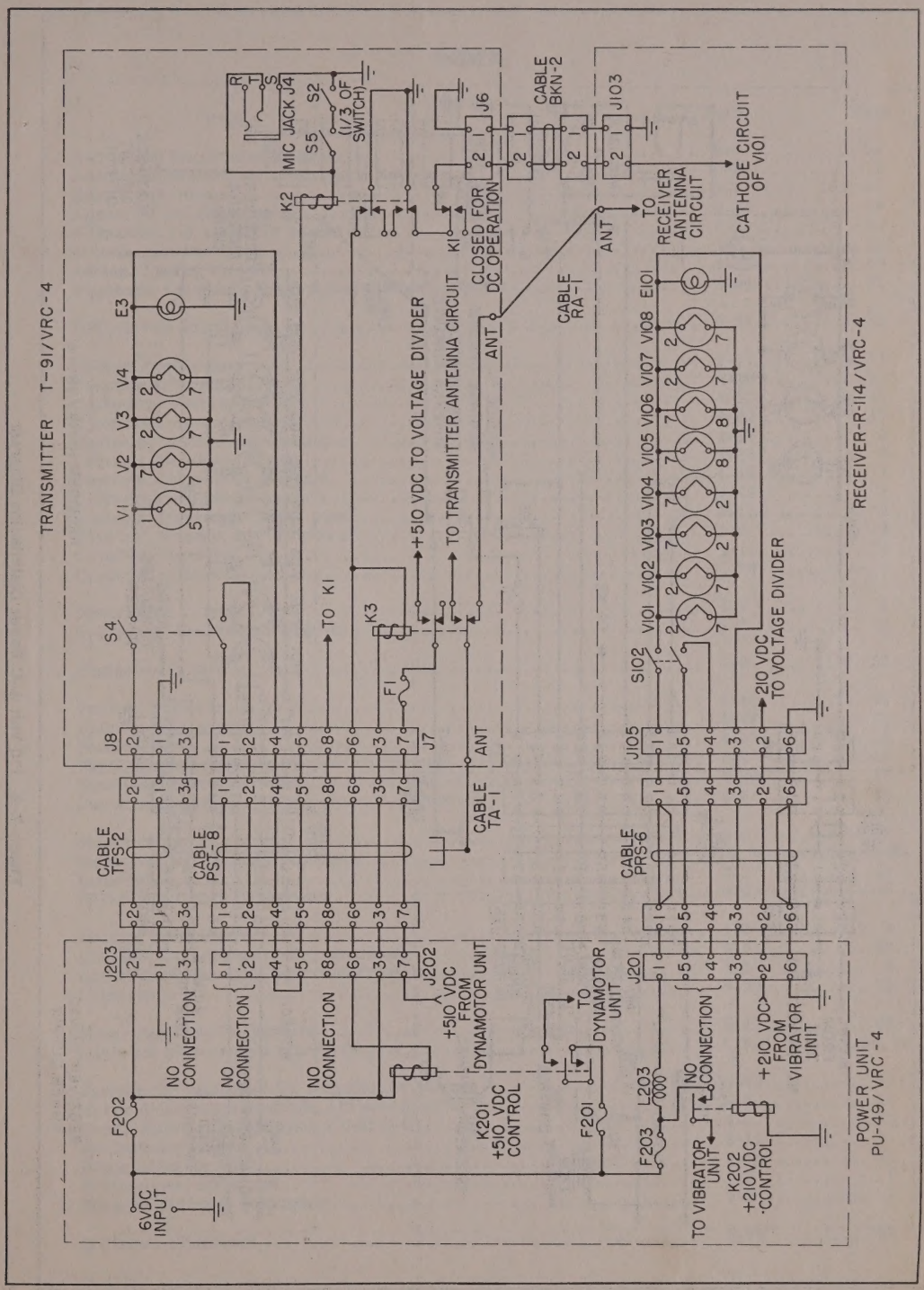

Figure 7-3. 6 Volt D-C Power Distribution Diagram

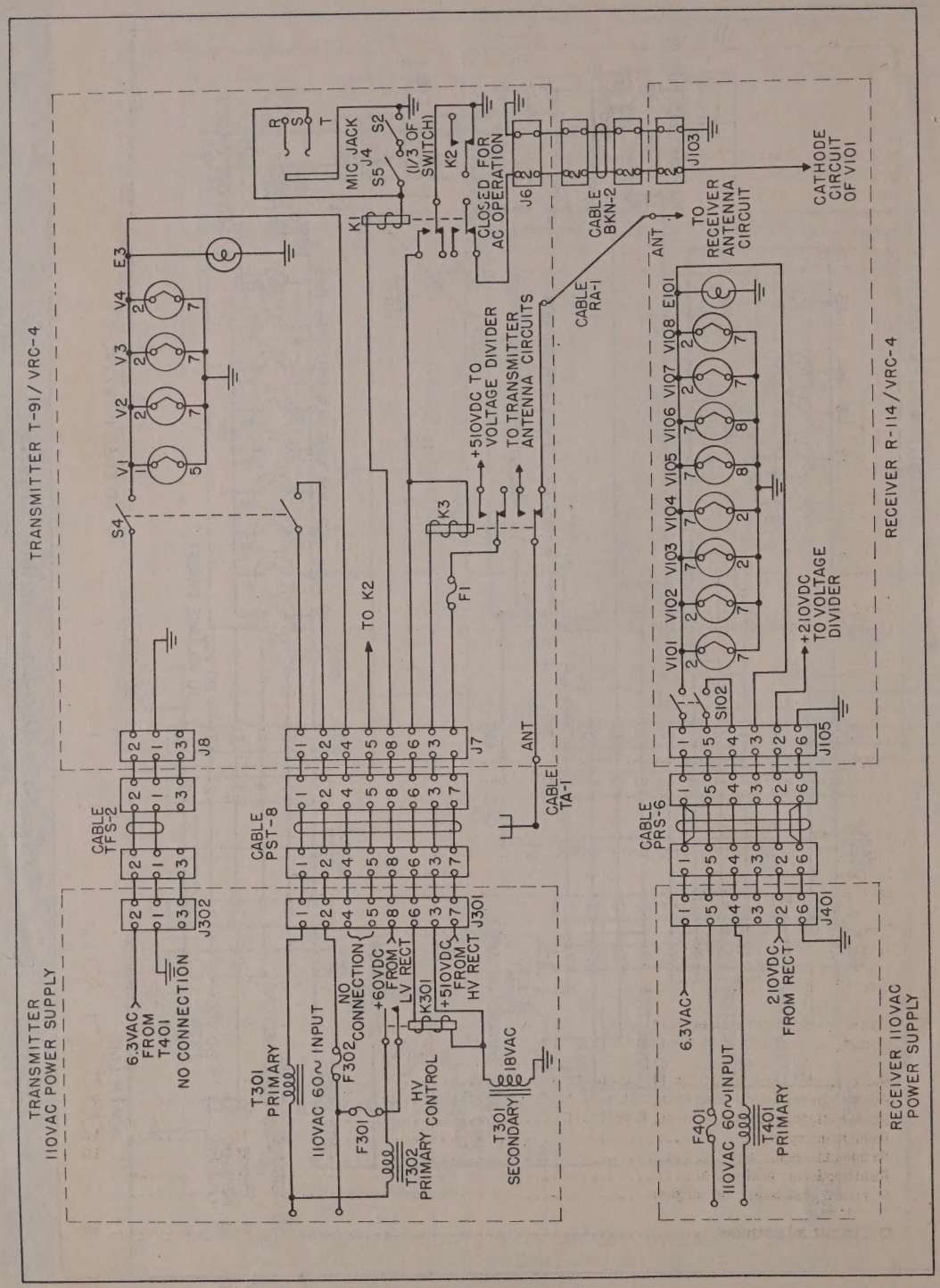

Figure 7-4. 110 Volt A-C Power Distribution Diagram

INDEX

Item	Para.	Page
A-C power distribution diagram	7-4	54
Additional publications	1-2	1
Adjustment, minor	5-17	27
Alignment and adjustments	6-14	43
Alignment, I-F amplifier stages	6-33	50
Antenna considerations	3-6	10
Antenna loading circuit	6-23	45
Automatic squelch or Q circuit adjustment	6-36	50
BFO circuit adjustment	6-35	50
Checks, preliminary	3-11	12
Cleaning schedule	5-30	29
Continuous wave operation	4-22	15
Continuous wave reception	4-42	17
Controls, location and function of	1-12	3
Controls, receiver chassis	1-16	6
Controls, receiver front panel	1-15	4
Controls, transmitter chassis	1-14	3
Controls, transmitter front panel	1-13	3
Crystals, location and function of	1-9	3
Crystals, receiver	1-11	3
Crystals, transmitter	1-10	3
Description	1-1	1
D-C power distribution diagram	7-3	53
Equipment failure	6-9	31
Failure, receiver	5-15	25
Failure, transmitter	5-14	25
Failure, tube	5-10	25
Functional operation, electronic components	4-4	13
Functional operation, Receiver R-114/VRC-4	4-39	17
Functional operation, Transmitter T-91/VRC-4	4-5	13
Identification	1-2	1
Inspection and cleaning schedule	5-30, 6-40	29, 50
Installation	3-3	10
Interconnection of components	3-8	10
Leading particulars	1-5	2
Location and arrangement, components	3-4	10
Location and function, tubes and crystals	1-9	3
Lubrication	5-28	29
Minor repair and adjustment	5-17	27
Minimum performance standards	5-1, 6-1	24, 29
Packing the equipment for shipment or storage	3-12	12
Power distribution diagram, 110 volt A-C	7-4	54
Power distribution diagram, 6 volt D-C	7-3	53
Preliminary checks	3-11	12
Preparation for use	3-10	10
Publications, additional	1-2	1
Purpose and basic principles	1-3	1
Q Circuit adjustment	6-36	50

Item	Para.	Page
Range communication	1-3	1
Receiver adjustments	5-24	29
Receiver chassis controls	1-16	6
Receiver check chart	5-4, 6-4	24, 30
Receiver failure	5-15	25
Receiver front panel controls	1-15	4
Receiver schematic	7-2	52
Receiver trouble shooting chart	6-11	36
Receiver tubes and crystals	1-11	3
Receiver tuning and adjustments	6-27	47
Receiver voltage and resistance chart	6-13	40
Repair and adjustment, minor	5-17	27
Running spares	3-2	10
Schematic, receiver	7-2	52
Schematic, transmitter	7-1	51
Shipment or storage, packing for	3-12	12
Signal-to-noise ratio measurement	6-38	50
Squelch adjustment	6-36	50
System operation	4-1	13
Systems analysis	5-5, 6-5	25, 31
Table 1-1. Equipment supplied	1-3	1
Table 1-2. Equipment required but not supplied	1-4	1
Table 1-3. General particulars	1-6	2
Table 1-4. Transmitter particulars	1-7	2
Table 1-5. Receiver particulars	1-8	2
Transmitter chassis controls	1-14	3
Transmitter check chart	5-3, 6-3	24, 29
Transmitter failure	5-11	25
Transmitter front panel controls	1-13	3
Transmitter schematic	7-1	51
Transmitter trouble shooting chart	6-10	31
Transmitter tubes and crystals	1-10	3
Transmitter tuning and adjustments	6-15	43
Tube failure	5-10	25
Tubes, receiver	1-11	3
Tubes, transmitter	1-10	3
Tuning chart, crystal operation	6-22	44
Tuning chart, variable frequency operation	6-25	45
Tuning, crystal control	6-21, 6-26, 6-30	43, 47
Tuning variable frequency control	6-24, 6-31	45, 47
Uncrating procedure	3-1	10
Voice operation	4-7	13
Voltage indicator (E2)	4-37	17
Weight, overall	1-6	2